1-H

DESIGN DESIGNATION	U.S. 20	CASEMENT AVE.
CURRENT A.D.T. (1985)	10,800	1,080
DESIGN YEAR A.D.T. (2005)	16,200	1,620
D.H.V.	1,200	120
D	60-40%	60-40%
T	6 %	6 %
V	35 MPH	30 MPH

STATE OF OHIO
DEPARTMENT OF TRANSPORTATION

LAKE-20-17.14

CITY OF PAINESVILLE & PAINESVILLE TOWNSHIP

LAKE COUNTY

BRF-69(16)

F.H.W.A. REGION	STATE	PROJECT	
5	OHIO	BRF-69(16)	

1 / 86

LAKE COUNTY
LAK-20-17.14

MICROFILMED
APR 1 1992

CONVENTIONAL SIGNS

PROPERTY LINE — IN EXISTING FENCE
COMMON OWNERSHIP LINE
ORIGINAL TOWNSHIP LOT LINE
CORPORATION LINE
CENTER LINE
RIGHT OF WAY LINE EXISTING — PROPOSED — TEMPORARY
LIMITED ACCESS LINE (EXISTING)
LIMITED ACCESS AND RIGHT OF WAY LINE (EXISTING)
SEWER EASEMENT LINE
FENCE LINE EXISTING — PROPOSED
GUARD RAIL EXISTING — PROPOSED
RAILROAD EXISTING — PROPOSED
TREES
UTILITY POLES LIGHT — TELEPHONE — POWER — COMBINATION
OIL LINE
WATER LINE EXISTING — PROPOSED
GAS LINE
CONDUITS ELECTRICAL — TELEPHONE
FIRE HYDRANT EXISTING — PROPOSED
STORM SEWER EXISTING — PROPOSED
SANITARY SEWER EXISTING — PROPOSED
CATCH BASIN OR INLET EXISTING — ADJUSTED TO GRADE — PROPOSED
MANHOLE EXISTING — ADJUSTED TO GRADE — PROPOSED STORM — SANITARY

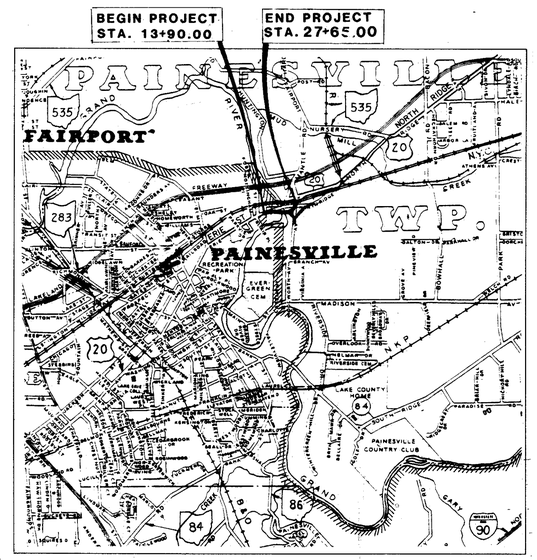

LOCATION MAP

SCALE IN MILES
1 0 1

Portion To Be Improved
State & Federal
Other Roads

SCALES

Plan Approach Roadways 0 50 100
Profile: Horizontal 0 50 100, Vertical 0 10 20
Cross Section: Horizontal 0 10 20, Vertical 0 10 20

INDEX OF SHEETS

TITLE SHEET ---- 1
SCHEMATIC GEOMETRIC PLAN ---- 2
MONUMENT REFERENCES ---- 3
TYPICAL SECTIONS ---- 4-6
GENERAL NOTES ---- 7-10
COMPUTATIONS & SUB-SUMMARIES ---- 11-12
GENERAL SUMMARY ---- 13-15
PLAN AND PROFILES ---- 16-17
CROSS SECTIONS ---- 18-28
PLAN & PROFILE, ERIE STREET EXTENSION -- 29
CROSS SECTIONS, ERIE STREET EXTENSION -- 30-31
DRIVE PLAN & CROSS SECTIONS ---- 32-35
INTERSECTION DETAILS ---- 36
MISCELLANEOUS ROADWAY DETAILS -- 37
GRADING PLANS ---- 38-39
STRUCTURES, 20' SPAN & UNDER ---- 40
TRAFFIC CONTROL PLANS ---- 42,42A & 43
SEWER PROFILES ---- 44-45
RETAINING WALL PLANS ---- 46-47
STRUCTURES, OVER 20' SPAN ---- 48-69
WATERWORK ---- 70-81
RIGHT-OF-WAY PLANS ---- 83-86
SHEETS NOT USED ---- 41,73,75,77,78,80,82,65

LINE DATA

Begin Project	STA. 13+90.00
End Project	STA. 27+65.00
Additions &/or Deductions	
Length of Project	1375.00 L.F or 0.260 MILES
ADD FOR APPROACHES	
U.S. 20	
STA. 13+65.00 TO STA. 13+90.00	25.00 L.F.
STA. 27+65.00 TO STA. 29+25.00	160.00 L.F.
CASEMENT AVENUE	
STA. 10+22.84 TO STA. 14+75.00	452.16 L.F.
ERIE STREET EXT.	
STA. 0+24.00 TO STA. 5+25.00	501.00 L.F.
Length of Work	2513.16 L.F. OR 0.476 MILES

WOODRUFF, INC.
By: Charles A. DeMore
Charles A. DeMore

PLANS PREPARED BY:

WOODRUFF, INC.
CONSULTING ENGINEERS
23875 COMMERCE PARK ROAD
CLEVELAND, OHIO 44122

SEAL

Project:
Date of Letting _____ 19__, Contract No. _____

1985 SPECIFICATIONS

The standard specifications of the State of Ohio, Department of Transportation, including changes and supplemental specifications listed in the proposal shall govern this improvement.

I hereby approve these plans. *The highway is closed to traffic and detours are in effect.*

Approved Martin A. Gallitz
Date 2-6-86 **District Deputy Director of Transportation**

Approved Walter J. Jennings
Date 4-26-86 **Engineer, Bureau of Bridges and Structural Design**

Approved Wayne H. Kauble
Date 6-20-86 **Chief Engineer, Planning and Design**

Approved Warren J. Smith
Date 6-20-86 **Director, Department of Transportation**

2 WORKING DAYS BEFORE YOU DIG CALL OHIO UTILITIES PROTECTION SERVICE
800-362-2764 (TOLL FREE)
NON-MEMBERS MUST BE CALLED DIRECTLY

SUPPLEMENTAL SPECIFICATIONS	
824 (10-8-82)	932 (3-25-85)
	949 (12-24-85)
847 (10-17-83)	
849 (12-24-85)	
853 (6-26-78)	
947 (10-17-83)	
956 (6-26-78)	

SUPPLEMENTAL PRINTS OF STANDARD CONSTRUCTION DRAWINGS				
BP-1 (6-1-65)	F-1 (11-10-83)	HW-4B (4-1-80)		AS-1-81 (11-27-81)
BP-2 (1-11-85)		HW-1 (6-1-65)	-	BR-2-82 (11-1-82)
BP-3 (12-6-76)	GR-1 (1-11-85)		MH-1 (12-18-84)	EXJ-2-81 (4-2-84)
BP-4 (1-11-85)	GR-2B (2-5-82)	MC-1 (6-13-69)	MH-3 (12-18-84)	RB-1-55 (2-2-59)
BP-5 (1-11-85)	GR-2C (2-5-82)	MC-4 (7-26-76)	MH-5 (6-12-75)	SD-1-69 (6-12-69)
BP-6 (6-1-65)	GR-3 (1-21-85)			
BP-7 (12-6-76)	GR-4 (2-5-82)	MC-11 (8-1-78)	-	
BP-10 (1-30-84)	GR-4A (1-30-84)	MC-10 (5-1-76)	L-1 (6-1-79)	TC-41.20 (3-26-79)
CB-2-2-A & B (5-1-79)	GR-5 (2-5-82)			TC-42.20 (3-26-79)
CB-3 (5-1-79)	GR-6 (2-5-82)			TC-52.10 (4-3-79)
CB-3A (5-1-79)				TC-52.20 (4-3-79)
CB-5 (11-10-83)	GR-4B (2-5-82)			TC-71.10 (4-9-79)
CB-6 (5-1-79)				

REV. 9-4-86

06394

DEPARTMENT OF TRANSPORTATION
FEDERAL HIGHWAY ADMINISTRATION

APPROVED:

DIVISION ADMINISTRATOR **DATE**

U.S. 20 OVER GRAND RIVER

BENCH MARK
Top of Hydrant @ Corner of Fobes Street & U.S.20, Elev.=655.46
Cut on Southeast Wing Wall @ Railroad Underpass, Elev.=650.23

SCHEMATIC GEOMETRIC PLAN

F.H.W.A. REGION	STATE	PROJECT	
5	OHIO		

2 / 86

LAKE COUNTY
LAK-20-17.14

50 0 50 100 150 200
SCALE IN FEET

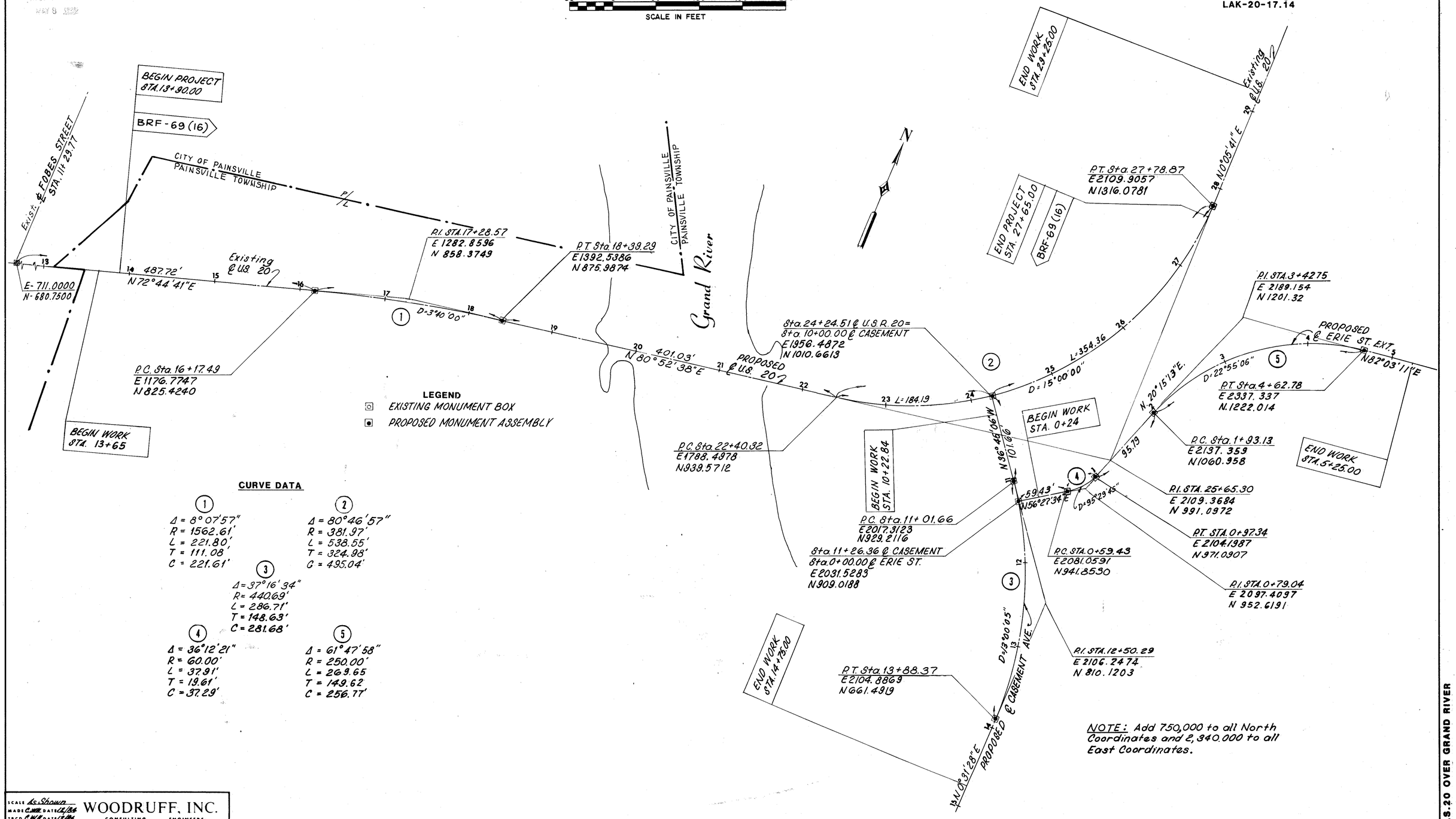

NOTE: Add 750,000 to all North Coordinates and 2,340,000 to all East Coordinates.

SCALE As Shown
MADE CWR DATE 12/84
TRCD. CWR DATE 12/84
CKD. MLC DATE 1-85

WOODRUFF, INC.
CONSULTING ENGINEERS
CLEVELAND OHIO

U.S.20 OVER GRAND RIVER

F.H.W.A. REGION	STATE	PROJECT	
5	OHIO		

3
86

LAKE COUNTY
LAK-20-17.14

LEGEND

- D.H. Drill Hole
- P.K. Parker Kalon Nail
- I.P. Iron Pin
- R.R. Rail Road Spike

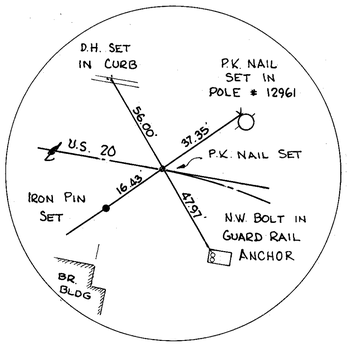

STA 16+17.49 PC
US 20

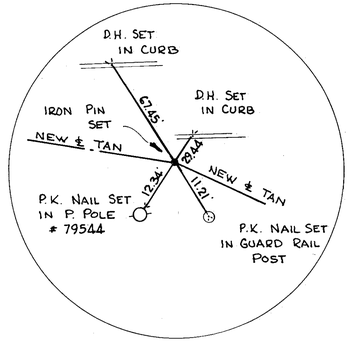

STA 17+28.57 PI
US 20

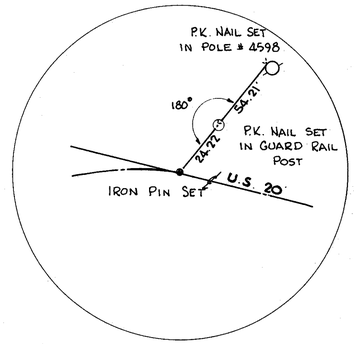

STA 18+39.29 PT
US 20

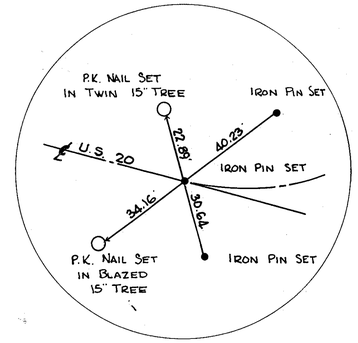

STA 22+40.32 PC
US 20

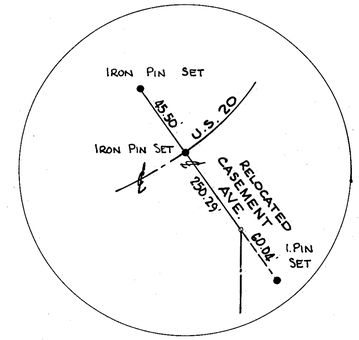

STA 24+24.51 US 20
STA 10+00.00 CASEMENT AVE

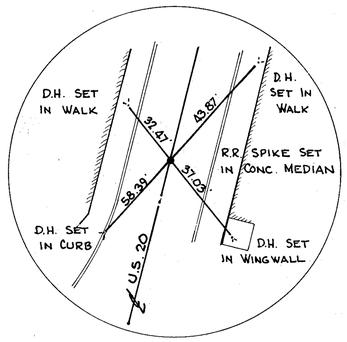

STA 27+78.87 PT
US 20

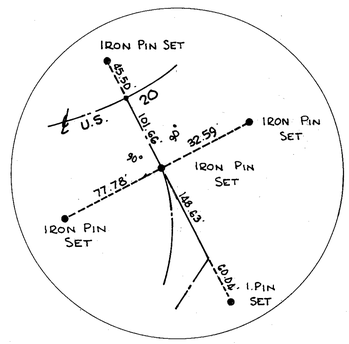

STA 11+01.66 PC
CASEMENT AVE RELOC.

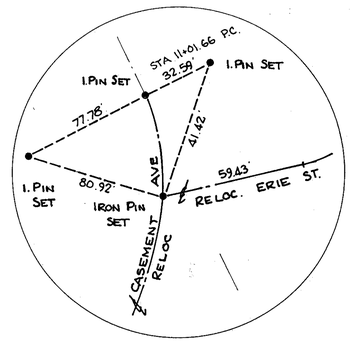

STA 11+26.36 CASEMENT AVE RELOC
STA 0+00 RELOC. ERIE ST. EXTENSION

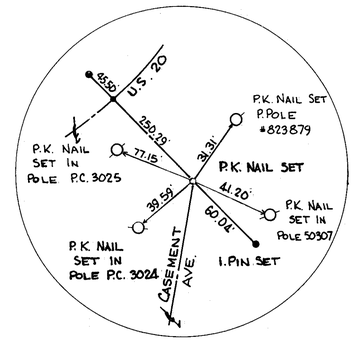

STA 12+50.29 P.I.
CASEMENT AVE RELOC.

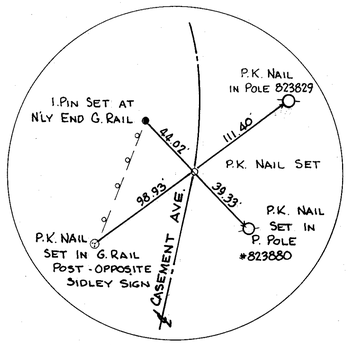

STA 13+88.37 PT
CASEMENT AVE. RELOC

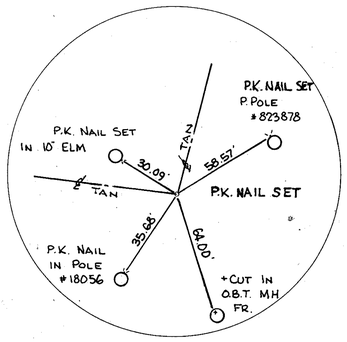

STA 25+65.30 PI US 20

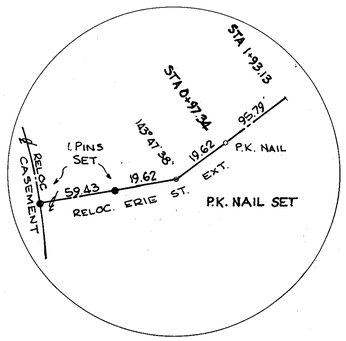

STA 0+59.43 PC
RELOC. ERIE ST. EXTENSION

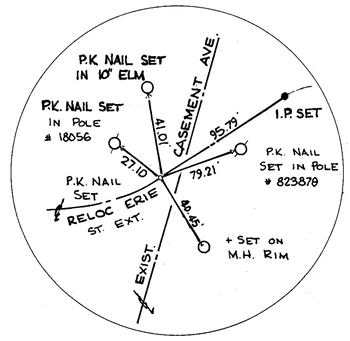

STA 0+97.34 PC
RELOC. ERIE ST. EXTENSION

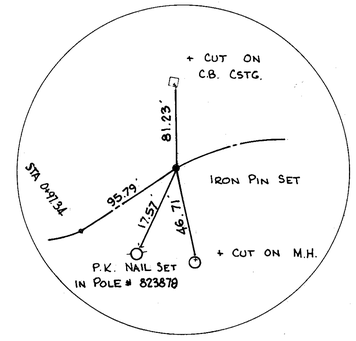

STA 1+93.13 PC
RELOC. ERIE ST. EXTENSION

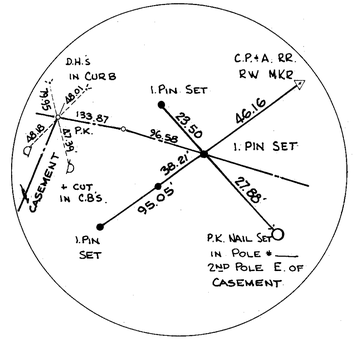

STA 4+62.78 PT
RELOC. ERIE ST. EXTENSION

SCALE ____
MADE WJV DATE 9/9/85
TRCD. ____ DATE ____
CKD. ____ DATE ____

WOODRUFF, INC.
CONSULTING ENGINEERS
CLEVELAND OHIO

U S 20 OVER GRAND RIVER

MONUMENT REFERENCES 3

TYPICAL SECTIONS

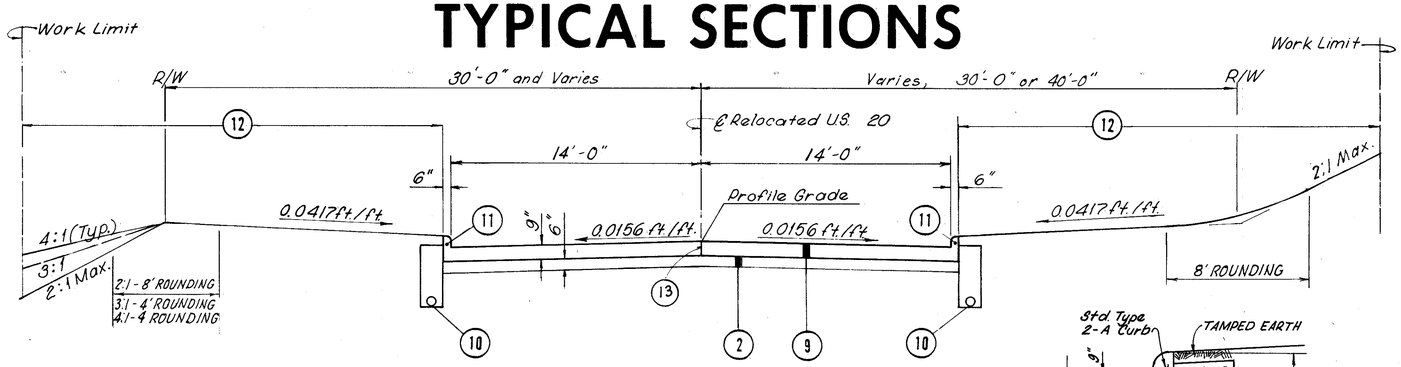

U.S.R. 20
STATION 13+90 TO STATION 18+66

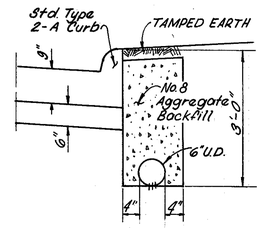

UNDERDRAIN DETAIL
605 6" Unc. Pipe U.D
As Per Plan

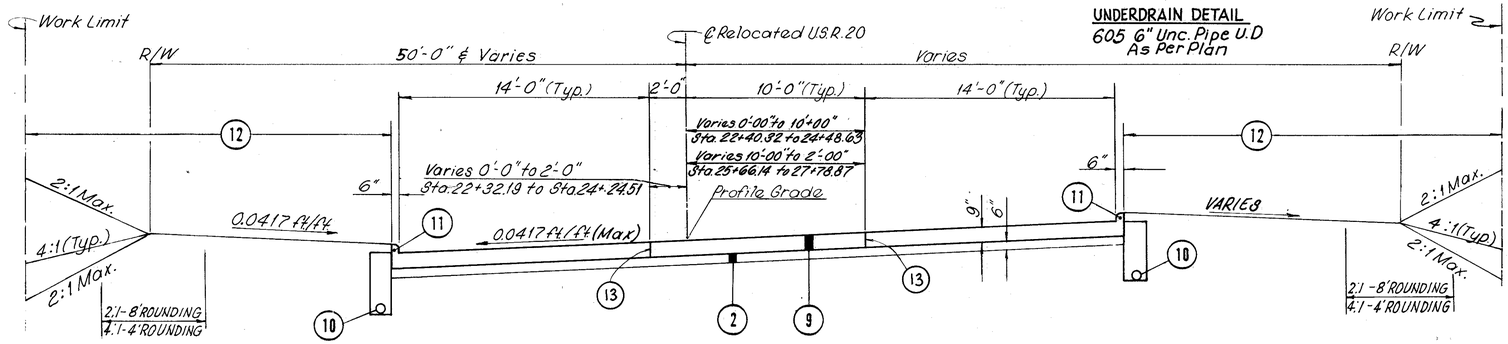

U.S. 20
SUPERELEVATED SECTIONS
STATION 23+14.56 TO STATION 27+65

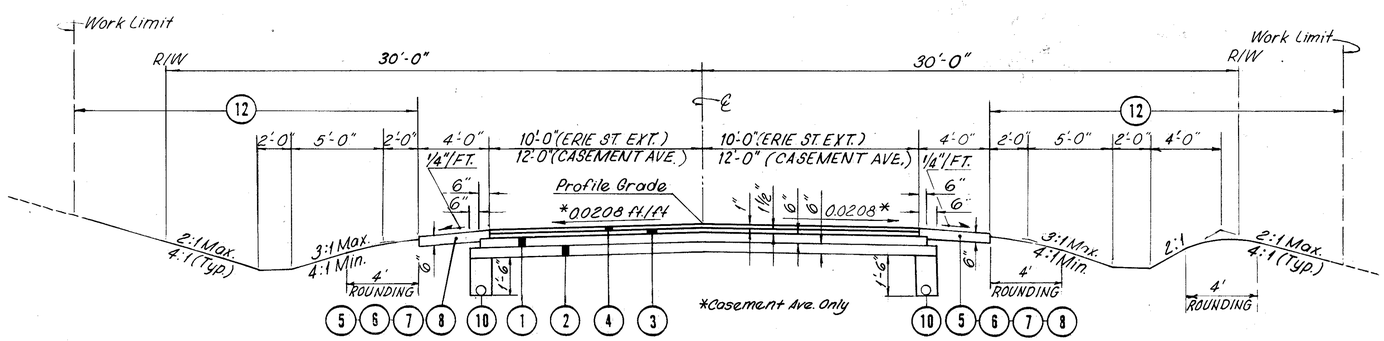

ERIE STREET EXTENSION STATION 0+00 TO STATION 5+00
CASEMENT AVENUE STATION 10+00 TO STATION 14+50

SUPERELEVATION			
ERIE STREET			
STA.	10' LEFT SIDE	℄	10' RIGHT SIDE
1+15.57	650.30	651.51	650.51
1+25	650.83	651.01	650.98
1+50	651.28	651.37	651.25
1+74.80	651.68	651.68	651.47
1+93.13	652.00	651.90	651.69
2+00	652.13	651.99	651.78
2+11.36	652.34	652.13	651.92
2+25	652.51	652.30	652.09
2+50	652.82	652.61	652.40
2+75	653.13	652.92	652.71
3+00	653.44	653.23	653.02
3+25	653.75	653.54	653.33
3+50	654.06	653.85	653.64
3+75	654.37	654.16	653.95
4+00	654.68	654.47	654.26
4+25	654.99	654.78	654.57
4+44.55	655.23	655.02	654.81
4+50	655.27	655.09	654.88
4+62.78	655.35	655.25	655.04
4+81.01	655.47	655.47	655.26

F.H.W.A. REGION	STATE	PROJECT	
5	OHIO		

4
86

LAKE COUNTY
LAK-20-17.14

SUPERELEVATION			
CASEMENT AVE.			
STATION	LT. SIDE	℄	RT. SIDE
11+79.08	650.47	650.11	649.75
12+00	651.60	651.24	650.88
12+50	654.56	654.20	653.84
13+00	658.02	657.66	657.30
13+50	661.93	661.60	661.27
13+59.46	662.67	662.35	662.03
13+75	663.75	663.57	663.39
13+77.11	663.90	663.74	663.58
14+00	665.56	665.54	665.52
14+03.36	665.80	665.80	665.80
14+25	667.45	667.51	667.45
14+50	669.36	669.48	669.36

LEGEND

REF. NO.	ITEM NO.	DESCRIPTION
1	301	BITUMINOUS AGGREGATE BASE AC-20, RT-11, RT-12
2	310	SUBBASE, TYPE II
3	402	ASPHALT CONCRETE AC-20
4	404	ASPHALT CONCRETE AC-20,
5	408	BITUMINOUS PRIME COAT, 0.4 GAL./SQ. YD.
6	409	SEAL COAT BITUMINOUS MATERIAL, 0.3 GAL. SQ. YD.
7	409	SEAL COAT COVER AGGREGATE NO.8, 0.008 CY/SQ. YD.
8	411	STABILIZED CRUSHED AGGREGATE
9	451	9" REINFORCED CONCRETE PAVEMENT
10	605	6" UNCLASSIFIED PIPE UNDERDRAINS As per plan
11	609	CURB, STANDARD TYPE 2-A
12	659	SEEDING AND MULCHING
13		STANDARD LONGITUDINAL JOINT

SUPERELEVATION U.S. RT. 20							
STATION	LT. SIDE	℄	RT. SIDE	STATION	LT. SIDE	℄	RT. SIDE
21+00	629.80	630.02	629.80	26+50	645.53	646.20	647.20
21+25	631.14	631.36	631.20	26+00	645.71	646.38	647.33
21+50	632.58	632.80	632.71	26+50	645.56	646.23	647.11
21+75	634.04	634.26	634.23	27+00	645.04	645.71	646.51
21+87.36	634.73	634.95	634.95	27+03.6	644.88	645.55	646.33
22+00	635.42	635.64	635.71	27+25	644.69	645.29	645.96
22+25	636.71	636.93	637.15	27+50	644.28	644.76	645.27
22+25.58	636.73	636.95	637.17	27+75	643.77	644.13	644.49
22+38.42	637.88	637.59	637.30	27+78.87	643.70	644.03	644.36
22+50	637.80	638.14	638.49	27+93.57	643.34	643.59	643.84
22+75	638.81	639.27	639.77	28+00	643.18	643.39	643.60
23+00	639.73	640.31	640.97	28+25	642.48	642.55	642.62
23+07.69	639.99	640.61	641.33	28+37.25	642.10	642.10	642.10
23+50	641.51	642.15	642.86	28+50	641.40	641.60	641.40
24+00	643.00	643.66	*	28+75	640.35	640.60	640.35
24+50	644.17	644.84	*	29+00	639.35	639.60	639.35
25+00	645.02	645.69	646.69				
*SHOWN ON INTERSECTION DETAILS.							

NOTE:
ROUNDING OF CORNERS SHOWN ON CROSS SECTIONS The rounded corners shown on the typical sections, apply to all cross sections even though otherwise shown on these plans.

SCALE AS SHOWN
DWN CWH DATE 3-84
TRCD CWH DATE 3-84
CKD MKC DATE 1-85

WOODRUFF, INC.
CONSULTING ENGINEERS
CLEVELAND OHIO

REFERENCES!		
	Intersection Details	Pg. 36
	Grading Plans	Pgs. 38 & 39
	Cross Sections	Pgs. 18-28 & 30-31

U.S. 20 OVER GRAND RIVER

F.H.W.A. REGION	STATE	PROJECT	
5	OHIO		

5/86

LAKE COUNTY
LAK-20-17.14

EXISTING TYPICAL SECTIONS

4 0 4 8 12 16
SCALE IN FEET

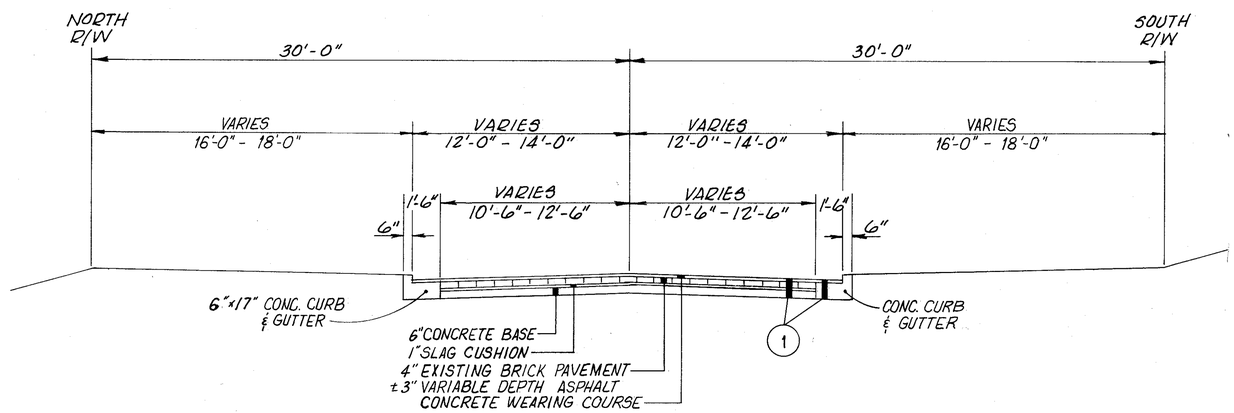

U.S. ROUTE 20
WEST OF THE GRAND RIVER

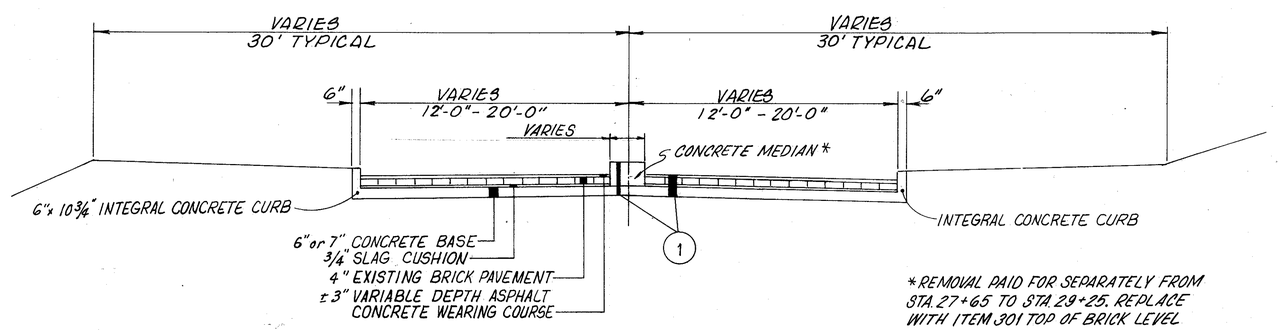

*REMOVAL PAID FOR SEPARATELY FROM STA. 27+65 TO STA. 29+25. REPLACE WITH ITEM 301 TOP OF BRICK LEVEL

U.S. ROUTE 20
EAST OF THE GRAND RIVER

LEGEND

(1) 202 PAVEMENT REMOVED

SCALE As Shown
MADE MKC DATE 9/84
TRCD EJK DATE 9/84
CKD MKC DATE 1/85

WOODRUFF, INC.
CONSULTING ENGINEERS
CLEVELAND OHIO

U.S. 20 OVER GRAND RIVER

EXISTING TYPICAL SECTIONS

F.H.W.A. REGION	STATE	PROJECT	
5	OHIO		

6
86

LAKE COUNTY
LAK-20-17.14

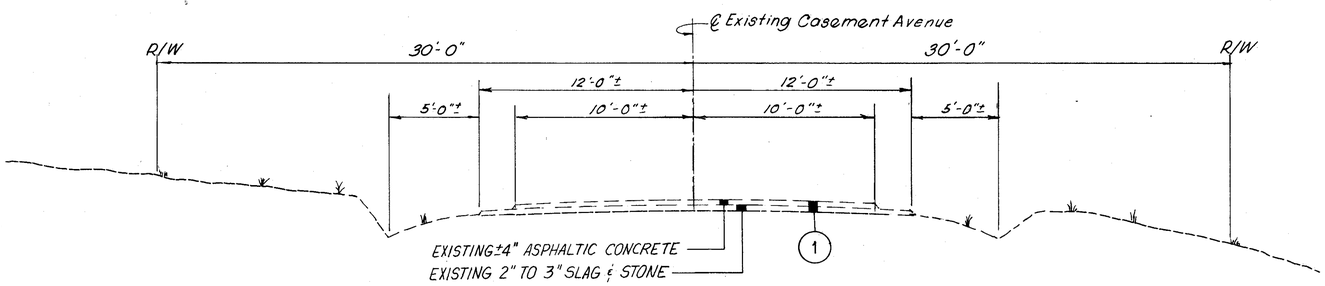

CASEMENT AVENUE

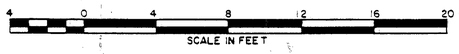

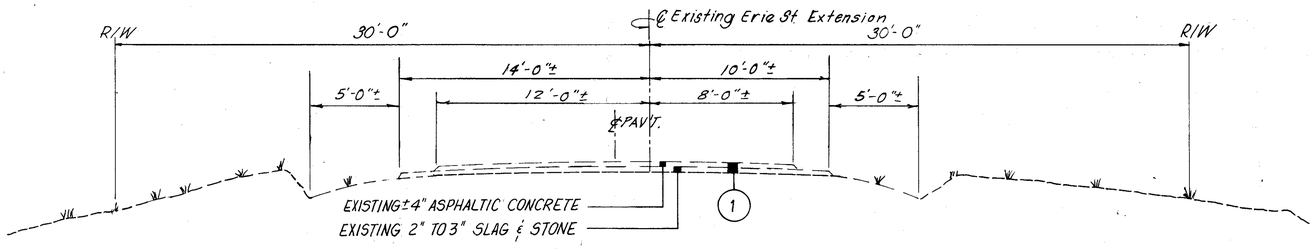

ERIE STREET EXTENSION

LEGEND

(1) 203 EXCAVATION NOT INCLUDING EMBANKMENT CONSTRUCTION

SCALE As Shown
MADE Cull DATE 1/86
TRCD. Cull DATE 1/86
CKD. JM DATE 1/85

WOODRUFF, INC.
CONSULTING ENGINEERS
CLEVELAND OHIO

U.S.20 OVER GRAND RIVER

MICROFILMED
MAY 8 1990

GENERAL NOTES

GENERAL

SCOPE OF WORK

THIS PROJECT ENCOMPASSES THE DEMOLITION OF THE EXISTING U.S. ROUTE 20 BRIDGE OVER THE GRAND RIVER AND CONSTRUCTION OF A REPLACEMENT STRUCTURE APPROXIMATELY 100 FEET SOUTH OF THE PRESENT BRIDGE LOCATION. ALSO INCLUDED IS THE REALIGNMENT OF 1,400 FEET OF U.S. ROUTE 20 FROM APPROXIMATELY 250 FEET EAST OF FOBES STREET TO

THE EXISTING RAILROAD UNDERPASS, CASEMENT AVE. FOR A DISTANCE OF APPROXIMATELY 500 FEET SOUTH OF RELOCATED U.S. ROUTE 20, AND ERIE STREET EXTENSION FOR A DISTANCE OF APPROXIMATELY 500 FEET EAST OF RELOCATED CASEMENT AVENUE.

CONTINGENCY QUANTITIES

THE CONTRACTOR SHALL NOT ORDER MATERIALS OR PERFORM WORK LISTED IN THE GENERAL SUMMARY OR DESIGNATED BY PLAN NOTE TO BE USED "AS DIRECTED BY THE ENGINEER" UNLESS AUTHORIZED BY THE ENGINEER. THE ACTUAL WORK LOCATIONS AND QUANTITIES USED AT THE ENGINEER'S DISCRETION SHALL BE MADE A MATTER OF RECORD BY INCORPORATION INTO THE FINAL CHANGE ORDER GOVERNING COMPLETION OF THIS PROJECT.

ELEVATION DATUM

ALL ELEVATIONS SHOWN ON THESE PLANS ARE IN FEET ABOVE THE UNITED STATES GEODETIC SURVEY (USGS) DATUM PLANE. ELEVATIONS AND DESCRIPTIONS OF USGS MONUMENTS ALONG THE PROJECT ARE SHOWN ON THE PLANS.

ITEM 619 FIELD OFFICE

THE CONTRACTOR SHALL PROVIDE A SUITABLE FIELD OFFICE HAVING A MINIMUM OF 800 SQUARE FEET OF FLOOR SPACE. PAYMENT SHALL BE AT THE LUMP SUM PRICE BID FOR ITEM 619 FIELD OFFICE.

~~ITEM 614 - MAINTAINING TRAFFIC~~

~~A. CONSTRUCTION SEQUENCE~~

~~IT IS THE INTENTION OF THESE PLANS TO KEEP THE EXISTING U.S. ROUTE 20 BRIDGE OPEN TO TRAFFIC AS LONG AS POSSIBLE WITHOUT HINDERING THE CONTRACTOR.~~

~~TO THIS END THE CONTRACTOR IS TO DEVELOP AND SUBMIT FOR APPROVAL BY THE STATE HIS SCHEDULE WHICH WILL PERMIT THE OPTIMUM USAGE OF THE EXISTING BRIDGE. THIS SCHEDULE SHALL BE IN THE FORM OF CRITICAL PATH METHOD (CPM) OR PROGRAM EVALUATION AND REVIEW TECHNIQUE (PERT) OR ANY OTHER ACCEPTED CONSTRUCTION SCHEDULING METHOD USED BY THE CONSTRUCTION INDUSTRY.~~

ITEM 614 – MAINTAINING TRAFFIC

A. CONSTRUCTION SEQUENCE

THE FOLLOWING CONSTRUCTION SEQUENCE SHALL BE CONSIDERED AS A POSSIBLE GUIDELINE AND SHOULD NOT HINDER THE DEVELOPMENT OF A FEASIBLE ALTERNATE.

~~BASED ON THE CONTRACTOR SCHEDULE THE PLANNED CLOSING DATE OF THE U.S. ROUTE 20 BRIDGE SHALL BE STATED AT THE PRECONSTRUCTION CONFERENCE.~~

THE CONSTRUCTION OF THIS PROJECT SHALL BE STAGED IN THE FOLLOWING PHASES:

PHASE 1. CONSTRUCTION OF THE RELOCATED WEST BRIDGE APPROACH EMBANKMENT.

PHASE 2. CONSTRUCTION OF THE RELOCATED EAST BRIDGE APPROACH FOR ROUTE 20, CASEMENT ROAD AND ERIE STREET EXTENSION.

PHASE 3. COMPLETION OF THE RELOCATED WEST BRIDGE APPROACH ROADWAY, CONSTRUCTION OF THE NEW BRIDGE OVER THE GRAND RIVER AND DEMOLITION OF THE EXISTING BRIDGE OVER THE GRAND RIVER.

PHASE 1 OF CONSTRUCTION WILL TAKE PLACE BETWEEN STATION 16+75 AND STATION 19+50. THE METHOD OF CONSTRUCTION TO BE FOLLOWED IS AS SHOWN ON THE PLANS AND AS DIRECTED BY THE ENGINEER. IT SHALL INCLUDE THE REMOVAL OF EXISTING FILL MATERIAL FROM THE PROPOSED LEFT SHOULDER AREA AND PLACEMENT OF IT IN THE AREA OF THE PROPOSED RIGHT SHOULDER, RECOMPACTION TO A MAXIMUM OF 7 FEET ABOVE ORIGINAL GRADE, PLACEMENT OF NEW COMPACTED 203 EMBANKMENT TO SUBBASE ELEVATION, AND PLACEMENT OF AN ADDITIONAL 5 FEET DEEP SURCHARGE TO THE FILL. THE SURCHARGE SHALL BE LEFT IN PLACE FOR A PERIOD OF NOT LESS THAN 4 MONTHS TO PROVIDE FOR POSSIBLE SETTLEMENT OF THE EMBANKMENT. THE SURCHARGE WOULD THEN BE REMOVED TO SUBBASE ELEVATION PRIOR TO COMPLETION OF THE WEST APPROACH ROADWAY.

B. TRAFFIC

U.S. ROUTE 20 HAS BEEN CLOSED TO THROUGH VEHICULAR TRAFFIC. THE CONTRACTOR SHALL REPLACE THE STATE'S EXISTING EIGHT (8) BARRICADES WITH HIS OWN. THIS IS TO BE COORDINATED WITH THE DISTRICT TRAFFIC ENGINEER. ALL OTHER DETOUR SIGNING WILL BE MAINTAINED AND SUBSEQUENTLY REMOVED BY THE STATE.

THROUGH VEHICULAR TRAFFIC FOR OHIO BRONZE, CASEMENT AVENUE, AND ERIE STREET EXTENSION MUST BE MAINTAINED AT ALL TIMES DURING CONSTRUCTION. RAILROAD TRAFFIC ON THE CONRAIL TRACKS MUST BE MAINTAINED AT ALL TIMES DURING CONSTRUCTION.

TWO LANE-TWO WAY TRAFFIC SHALL BE MAINTAINED AT ALL TIMES ON THE EXISTING RAILROAD UNDERPASS FOR U.S. ROUTE 20 AND CASEMENT AVE. TRAFFIC BY USING PART WIDTH PAVEMENT CONSTRUCTION AND RESURFACING.

PHASE I CONSTRUCTION WILL HAVE NO SIGNIFICANT EFFECT ON TRAFFIC TO OHIO BRONZE OR ALONG CASEMENT AVENUE OR ERIE STREET EXTENSION. NO SIGNIFICANT ALTERATIONS ARE ANTICIPATED IN ORDER TO MAINTAIN TRAFFIC.

PHASE II CONSTRUCTION WILL HAVE NO EFFECT ON TRAFFIC TO OHIO BRONZE. IT WILL DISRUPT FLOW ALONG CASEMENT AVENUE AND ERIE STREET EXTENSION. THE USE OF HALF-WIDTH CONSTRUCTION AND MINOR TEMPORARY RUN-AROUND ROADS WILL BE NECESSARY.

PHASE III CONSTRUCTION WILL HAVE NO EFFECT ON TRAFFIC ALONG CASEMENT AVE. AND ERIE STREET EXTENSION. TRAFFIC TO OHIO BRONZE WILL BE MAINTAINED THROUGH THE USE OF HALF-WIDTH CONSTRUCTION AND MINOR TEMPORARY RUN-AROUND ROADS.

IF THE CONTRACTOR SO ELECTS, HE MAY SUBMIT ALTERNATE METHODS FOR MAINTENANCE OF TRAFFIC PROVIDED THE INTENT OF THE ABOVE PROVISIONS IS FOLLOWED AND NO ADDITIONAL INCONVENIENCE TO THE TRAVELING PUBLIC RESULTS THEREFROM. NO ALTERNATE PLAN SHALL BE PLACED INTO EFFECT UNTIL APPROVAL HAS BEEN GRANTED, IN WRITING, BY THE DIRECTOR.

C. SAFEGUARDS

THE CONTRACTOR SHALL FURNISH, ERECT, MAINTAIN AND REMOVE ALL NECESSARY SAFE-GUARDS SUCH AS BARRICADES, LIGHTING, FLAGMEN, TEMPORARY GUARD RAIL, TEMPORARY CONCRETE BARRIERS, AND SUCH OTHER TRAFFIC CONTROL DEVICES AS PROVIDED IN "ITEM 614-MAINTAINING TRAFFIC" SO AS TO AVOID DAMAGE AND/OR INJURY TO VEHICLES AND PERSONS DURING CONSTRUCTION.

~~D. NOTIFICATION OF ROAD CLOSINGS~~

~~THE CITY OF PAINESVILLE POLICE, FIRE, AND SERVICE DEPARTMENTS SHALL BE NOTIFIED ONE WEEK PRIOR TO THE SCHEDULED DATE OF THE ROAD CLOSING.~~

E. SIGNING

ALL REQUIRED CONSTRUCTION TRAFFIC SIGNS USED SHALL BE IN ACCORDANCE WITH THE CURRENT EDITION OF THE OHIO MANUAL OF UNIFORM TRAFFIC CONTROL DEVICES FOR STREETS AND HIGHWAYS. THEY SHALL BE PROVIDED, ERECTED AND MAINTAINED BY THE CONTRACTOR.

F. PAYMENT

ALL COSTS FOR THE ABOVE WORK SHALL BE INCLUDED IN THE FOLLOWING BID ITEM:

ITEM 614	MAINTAINING TRAFFIC	LUMP SUM

MICROFILMED
MAY 8 '86

GENERAL NOTES

QUANTITY CALCULATIONS
BY MKC DATE 12-84
CHKD. J.M. DATE 1-85
WOODRUFF, INC.

F.H.W.A. REGION	STATE	PROJECT	
5	OHIO		

LAKE COUNTY
LAK-20-17.14

G. ESTIMATED QUANTITIES FOR MAINTAINING TRAFFIC

THE FOLLOWING ESTIMATED QUANTITIES HAVE BEEN PROVIDED FOR THE MAINTENANCE OF TRAFFIC AND ARE INCLUDED FOR USE ONLY WHEN AND IN AMOUNTS AS DIRECTED BY THE ENGINEER. THE AMOUNT OF THESE ITEMS AND THE LOCATIONS WHERE USED SHALL BE RECORDED AS USED AND PAYMENT WILL BE BASED ON FINAL MEASUREMENT.

ITEM 404	BITUMINOUS CONCRETE FOR MAINTAINING TRAFFIC	100 C.Y.
ITEM 410	TRAFFIC-COMPACTED SURFACE, TYPE "A" OR "B"	400 C.Y.
ITEM 616	WATER	100 M. GAL.
ITEM 616	CALCIUM CHLORIDE	14 TONS

THE PROVISIONS OF SECTION 104.02 WILL APPLY TO THESE ITEMS.

UNDERGROUND UTILITIES

THE LOCATIONS OF THE UNDERGROUND UTILITIES SHOWN ON THE PLANS ARE AS OBTAINED FROM THE OWNERS OF THE UTILITY IN ACCORDANCE WITH SECTION 153.64 OF THE OHIO REVISED CODE.

UTILITY OWNERSHIP

THE FOLLOWING UTILITIES AND OWNERS ARE LOCATED WITHIN THE WORK LIMITS OF THIS PROJECT:

EAST OHIO GAS COMPANY
1201 EAST 55th STREET
CLEVELAND, OHIO 44103
PHONE: 432-6906

CLEVELAND ELECTRIC ILLUMINATING CO.
55 PUBLIC SQUARE
CLEVELAND, OHIO 44113
PHONE: 622-9800

OHIO BELL TELEPHONE COMPANY
820 WEST SUPERIOR AVENUE
CLEVELAND, OHIO 44113
PHONE: 822-6241

CITY OF PAINESVILLE
WATER DEPARTMENT
7 RICHMOND ST.
PAINESVILLE, OHIO 44077
PHONE: 357-6322
NOT A MEMBER OF OHIO
UTILITIES PROTECTION SERVICE

CITY OF PAINESVILLE
ELECTRIC DEPT.
7 RICHMOND ST.
PAINESVILLE, OHIO 44077
PHONE: 357-6601

CITY OF PAINESVILLE
POLLUTION CONTROL DIVISION
(SANITARY SEWERS)
7 RICHMOND ST.
PAINESVILLE, OHIO 44077
PHONE: 357-5122

ROADWAY

EXISTING TYPICAL SECTIONS

EXISTING TYPICAL SECTIONS HAVE BEEN TAKEN FROM RECORDS AND BELIEVED TO REPRESENT THE EXISTING PAVEMENT, BUT THE STATE OF OHIO DOES NOT GUARANTEE THE ACCURACY OF SAME.

DUST CONTROL

THE FOLLOWING ESTIMATED QUANTITIES HAVE BEEN PROVIDED FOR THE APPLICATION FOR THE PREVENTION OR ALLEVIATION OF DUST WHERE DIRECTED AND IN THE AMOUNTS SPECIFIED BY THE ENGINEER:

ITEM 616	WATER	100 M.GAL.
ITEM 616	CALCIUM CHLORIDE	20 TONS

ROUNDING OF CORNERS SHOWN ON CROSS SECTIONS

THE ROUNDED CORNERS SHOWN ON THE TYPICAL SECTIONS, APPLY TO ALL CROSS SECTIONS EVEN THOUGH OTHERWISE SHOWN ON THESE PLANS.

EXCAVATION AS PER PLAN

THIS WORK SHALL CONSIST OF THE REMOVAL OF EXISTING FILL MATERIAL FROM THE PROPOSED LEFT SHOULDER AREA BETWEEN STATION 16+75 AND STATION 18+62 AS SHOWN ON THE SKETCH BELOW MARKED AS AREA "C". ALL WORK SHALL BE DONE IN CONFORMANCE WITH SECTION 203 OF THE OHIO DEPARTMENT OF TRANSPORTATION CONSTRUCTION AND MATERIAL SPECIFICATIONS. THE COST OF DISPOSAL OF EXCESS MATERIAL EXCAVATED UNDER THIS PAY ITEM AND NOT PLACED UNDER EMBANKMENT AS PER PLAN SHALL BE INCLUDED IN THE UNIT PRICE BID FOR THIS ITEM.

EMBANKMENT AS PER PLAN "A"

THIS WORK SHALL CONSIST OF THE PLACEMENT OF FILL MATERIAL IN THE AREA OF THE PROPOSED RIGHT SHOULDER BETWEEN STATION 16+75 AND STATION 18+81 AS SHOWN ON THE SKETCH BELOW MARKED AS AREA "S". THE FILL USED MAY BE THAT MATERIAL EXCAVATED UNDER EXCAVATION AS PER PLAN . THIS FILL MATERIAL IS TO BE RECOMPACTED TO A MAXIMUM DEPTH OF SEVEN FEET ABOVE ORIGINAL GRADE. ALL WORK SHALL BE DONE IN CONFORMANCE WITH SECTION 203 OF THE OHIO DEPARTMENT OF TRANSPORTATION CONSTRUCTION AND MATERIAL SPECIFICATIONS.

TYPICAL SCHEME FOR FILL PLACEMENT
STA. 16+75 TO 18+81

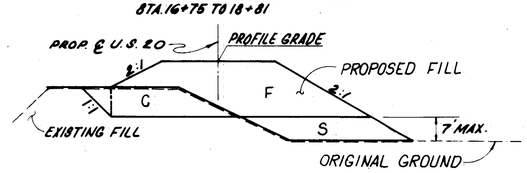

LEGEND

C. EXCAVATION, AS PER PLAN AND 203-EMBANKMENT

S. EMBANKMENT, AS PER PLAN "A"

F. 203 EMBANKMENT

EMBANKMENT AS PER PLAN "B"

THIS WORK SHALL CONSIST OF THE PLACEMENT OF AN ADDITIONAL FIVE FOOT SURCHARGE ON TOP OF THE PROPOSED EMBANKMENT BETWEEN STATION 16+65 AND STATION 18+81. THIS SURCHARGE SHALL BE LEFT IN PLACE FOR A PERIOD OF NOT LESS THAN FOUR MONTHS TO PROVIDE FOR POSSIBLE SETTLEMENT OF THE EMBANKMENT. THE SURCHARGE WOULD THEN BE REMOVED TO PROPOSED SUBBASE ELEVATION. THE COST OF THIS REMOVAL SHALL BE INCLUDED IN THE UNIT PRICE BID FOR THIS ITEM.

THE SURCHARGED FILL SHALL BE PROTECTED FROM EROSION BY THE PLACEMENT OF TEMPORARY SEEDING AND MULCHING. THIS ACTIVITY IS TO BE BID SEPARATELY.

TYPICAL SCHEME TO ACCELERATE SETTLEMENT
STA 16+65 TO 18+81

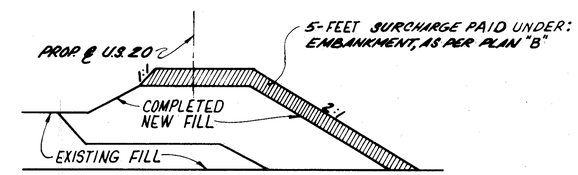

EMBANKMENT AS PER PLAN
TOE OF FILL REINFORCEMENT AT THE WEST BRIDGE ABUTMENT

THE FRONT SLOPE ADJACENT TO THE WEST BRIDGE ABUTMENT IS TO HAVE ITS STABILITY ENHANCED BY MEANS OF THE SCHEME DETAILED ON SHEET NUMBER 18. THE EXISTING GROUND AT THE TOE OF THIS FILL SHALL BE EXCAVATED AS SHOWN AND BACKFILLED. THE BACKFILL MATERIAL SHALL CONFORM TO SECTION 203.02 GRANULAR MATERIALS OF THE OHIO DEPARTMENT OF TRANSPORTATION CONSTRUCTION AND MATERIALS SPECIFICATIONS.

PAYMENT FOR THIS ITEM SHALL BE INCLUDED IN THE UNIT PRICE BID FOR ITEM 203 EMBANKMENT, AS PER PLAN.

ITEM 606 - BRIDGE TERMINAL ASSEMBLY STANDARD TYPE A, MODIFIED AS PER PLAN

WHEN MOUNTING TO THE EXISTING WALL, THE END TERMINAL SHALL BE ATTACHED USING 7/8 INCH DIAMETER ADHESIVE ANCHORS. *The anchors shall consist of 7/8"×6" studs secured by epoxy mortar as per Supp. Specs. 853 & 956. End terminal shall be secured to studs with 7/8" hex head nuts and washers.*

Payment for the above shall be included in the unit price bid for item 606 Bridge Terminal Assembly Std. Type A, Modified As Per Plan.

SCALE
MADE CWH DATE 10-84
TRCD. CWH DATE 10-84
CKD. MKC DATE 1-85
WOODRUFF, INC.
CONSULTING ENGINEERS
CLEVELAND OHIO

U.S.20 OVER GRAND RIVER

MAY 3

GENERAL NOTES

ITEM 207 TEMPORARY SOIL EROSION AND SEDIMENT CONTROL

THE FOLLOWING ESTIMATED QUANTITIES ARE TO BE USED AS DIRECTED BY THE ENGINEER FOR TEMPORARY EROSION AND SEDIMENT CONTROL MEASURES:

ITEM 207	TEMPORARY SEEDING AND MULCHING	3,100	SQ. YD.
ITEM 207	STRAW OR HAY BALES	72	EACH
ITEM 207	TEMPORARY SLOPE DRAINS	110	LIN. FT.
TIEM 207	TEMPORARY BENCHES, DIKES		
	DAMS AND SEDIMENT BASINS	550	CU. YD.
ITEM 207	FILTER FABRIC FENCE	110	LIN. FT.
ITEM 601	TYPE C ROCK CHANNEL PROTECTION		
	(WITHOUT BEDDING)	4	CU. YD.
ITEM 659	MOWING	34	M.SQ. FT.
ITEM 659	COMMERCIAL FERTILIZER	0.14	TON
ITEM 659	REPAIR SEEDING AND MULCHING	760	SQ. YD.
ITEM 659	WATER	7	M. GALLONS

ITEM 207 FILTER FABRIC FENCE

MATERIALS:

FILTER FABRIC SHALL MEET THE REQUIREMENT OF ITEM 207.02.

CONSTRUCTION:

THE BOTTOM OF THE FENCE SHALL BE BURIED 6" BELOW THE GROUND. THE FENCE SHALL BE HIGH ENOUGH TO RETAIN SEDIMENT LADEN WATER AND ADEQUATELY SUPPORTED TO PREVENT COLLAPSE OR BURSTING.

MAINTENANCE:

THE FILTER FABRIC FENCE SHALL, AT THE DIRECTION OF THE ENGINEER, BE MAINTAINED TO BE FUNCTIONAL. THIS SHALL INCLUDE REMOVAL OF TRAPPED SEDIMENT AND REQUIRED CLEANING, REPAIR, AND/OR REPLACEMENT OF THE FILTER FABRIC.

PAYMENT:

THE COST OF ALL MATERIALS, CONSTRUCTION, MAINTENANCE AND REMOVAL REQUIRED SHALL BE PAID FOR UNDER ITEM 207 LI.FT. FILTER FABRIC FENCE.

WATERING AND MOWING PERMANENT SEEDED AREAS

THE FOLLOWING ESTIMATED QUANTITIES ARE TO BE USED AS DIRECTED BY THE ENGINEER TO PROMOTE GROWTH AND TO CARE FOR THE PERMANENT SEEDED AREAS, AS PER 659.09:

ITEM 659	WATER	16	M GAL.
ITEM 659	MOWING	34	M SQ. FT.

ADDITIONAL SOIL INFORMATION

ALL AVAILABLE SOIL AND BEDROCK INFORMATION WHICH CAN BE CONVENIENTLY SHOWN ON THE SOIL PROFILE AND/OR STRUCTURE FOUNDATION INVESTIGATION SHEETS HAS BEEN SO REPORTED. ADDITIONAL SUBSURFACE INVESTIGATIONS MAY HAVE BEEN MADE TO STUDY SOME SPECIAL ASPECT OF THE PROJECT. COPIES OF THIS DATA, IF ANY, MAY BE INSPECTED IN THE DISTRICT DEPUTY DIRECTOR'S OFFICE, THE BUREAU OF TESTS AT 1600 WEST BROAD STREET, THE PAVEMENT AND SOILS SECTION OF THE BUREAU OF LOCATION AND DESIGN OR IN THE BRIDGE BUREAU AT 25 SOUTH FRONT STREET.

MONUMENTS

MONUMENTS SHALL BE CONSTRUCTED IN ACCORDANCE WITH DETAILS SHOWN ON STANDARD CONSTRUCTION DRAWING MC-1. FOR LOCATIONS, SEE SHEET NO. 2 .

LOCATION OF GUARDRAIL

THE LOCATIONS OF GUARDRAIL RUNS, AS SHOWN IN THESE PLANS, ARE SUBJECT TO ADJUSTMENT PRIOR TO FINAL ACCEPTANCE. THE ENGINEER SHALL BE SATISFIED THAT ALL INSTALLATIONS WILL AFFORD MAXIMUM PROTECTION FOR TRAFFIC.

SEEDING

QUANTITIES FOR SEEDING ARE CALCULATED FOR THE SOIL AREAS BETWEEN TEN (10) FEET OUTSIDE THE WORK LIMITS, AS SHOWN ON THE CROSS SECTIONS, OR TO THE RIGHT OF WAY LINE, IF SUCH LINE IS LESS THAN TEN (10) FEET FROM THE WORK LIMITS.

REMOVAL OF TREES OR STUMPS

ALL TREES AND STUMPS SPECIFICALLY MARKED FOR REMOVAL WITHIN THE CONSTRUCTION LIMITS OF THIS PROJECT SHALL BE REMOVED UNDER THE LUMP SUM PRICE BID FOR ITEM 201, CLEARING AND GRUBBING, EXCEPT THAT THOSE TREES FOR WHICH PROTECTION AND PRESERVATION WORK IS INDICATED ELSEWHERE IN THESE PLANS SHALL NOT BE REMOVED.

THE FOLLOWING IS AN APPROXIMATE ESTIMATE OF THE NUMBER OF TREES AND STUMPS TO BE REMOVED:

SIZES	NO. TREES	NO. STUMPS	TOTAL
18"	8	4	12
30"	2	1	3

THE ABOVE ESTIMATE IS APPROXIMATE AND THE STATE OF OHIO RESERVES THE RIGHT TO ORDER THE REMOVAL OF ADDITIONAL TREES OR STUMPS OUTSIDE OF THE LIMITS OF CONSTRUCTION BUT WITHIN THE RIGHT-OF-WAY AND/OR EASEMENT LINES. PAYMENT FOR THE REMOVAL OF THESE ADDITIONAL TREES OR STUMPS SHALL BE INCLUDED IN THE LUMP SUM BID FOR ITEM 201, CLEARING AND GRUBBING.

EROSION CONTROL

ITEM 601 IS PROVIDED IN THE PLANS FOR EROSION CONTROL. ROCK OF A STABLE NATURE WILL NOT BE REMOVED IN ORDER TO PLACE THIS ITEM. THE ENGINEER SHALL CHECK AND NON-PERFORM QUANTITIES OR ADJUST LOCATIONS AND QUANTITIES FOR THIS ITEM WHERE INDICATED BY FIELD CONDITIONS DURING CONSTRUCTION.

DRAINAGE

REVIEW OF DRAINAGE FACILITIES

BEFORE ANY WORK IS STARTED ON THE PROJECT, AND AGAIN BEFORE FINAL ACCEPTANCE BY THE STATE, REPRESENTATIVES OF THE STATE AND THE CONTRACTOR, ALONG WITH LOCAL REPRESENTATIVES SHALL MAKE AN INSPECTION OF THE EXISTING SEWERS WITHIN THE WORK LIMITS WHICH ARE TO REMAIN IN SERVICE AND WHICH MAY BE AFFECTED BY THE WORK. THE CONDITION OF THE EXISTING CONDUITS AND THEIR APPURTENANCES SHALL BE DETERMINED FROM FIELD OBSERVATIONS. RECORDS OF THE INSPECTIONS SHALL BE KEPT IN WRITING BY THE STATE.

ALL NEW CONDUITS, INLETS, CATCH BASINS, AND MANHOLES CONSTRUCTED AS PART OF THE PROJECT SHALL BE FREE OF ALL FOREIGN MATTER AND IN A CLEAN CONDITION BEFORE THE PROJECT WILL BE ACCEPTED BY THE STATE. ALL EXISTING SEWERS INSPECTED INITIALLY BY THE ABOVE-MENTIONED PARTIES SHALL BE MAINTAINED AND LEFT IN A CONDITION REASONABLY COMPARABLE TO THAT DETERMINED BY THE ORIGINAL INSPECTION. ANY CHANGE IN THE CONDITION RESULTING FROM THE CONTRACTOR'S OPERATIONS SHALL BE CORRECTED BY THE CONTRACTOR TO THE SATISFACTION OF THE ENGINEER.

PAYMENT FOR ALL OPERATIONS DESCRIBED ABOVE SHALL BE INCLUDED IN THE PERTINENT 603 CONDUIT ITEM.

RECEIVED
NOV 8 '82

GENERAL NOTES

MANHOLES, CATCH BASINS AND INLETS REMOVED OR ABANDONED

THE CASTINGS SHALL BE CAREFULLY REMOVED AND STORED WITHIN THE RIGHT-OF-WAY FOR SALVAGE BY CITY FORCES.

PAYMENT FOR ALL OF THE ABOVE SHALL BE INCLUDED IN THE UNIT PRICE BID FOR THE PERTINENT 202 ITEM.

CONNECTION TO EXISTING PIPE

WHERE THE PLANS PROVIDE FOR PROPOSED CONDUIT TO BE CONNECTED TO, OR TO CROSS EITHER OVER OR UNDER AN EXISTING SEWER, IT SHALL BE THE RESPONSIBILITY OF THE CONTRACTOR TO LOCATE THE EXISTING PIPE BOTH AS TO LINE AND GRADE BEFORE HE STARTS TO LAY THE PROPOSED CONDUIT. PAYMENT FOR ALL OPERATIONS DESCRIBED ABOVE SHALL BE INCLUDED IN THE UNIT PRICE BID FOR THE PERTINENT 603 CONDUIT ITEMS.

CONDUIT END TREATMENT

IMMEDIATELY AFTER PLACEMENT OF ANY CONDUITS, THE CONTRACTOR SHALL CONSTRUCT THE END TREATMENTS REQUIRED BY THE PLANS AT BOTH THE OUTLET AND INLET ENDS. THIS SHALL INCLUDE HEADWALLS, CONCRETE RIP RAP, ROCK CHANNEL PROTECTION, SODDING, ETC.

PAVEMENT

CONTRACTION AND EXPANSION JOINTS

ALTHOUGH SPECIFIC LOCATIONS OF CERTAIN EXPANSION AND CONTRACTION JOINTS HAVE BEEN DETAILED ON THIS PLAN, NO WAIVER OF THE SPECIFICATIONS IS INTENDED. PROVISION OF EXPANSION JOINTS AT ALL MAJOR STRUCTURES AND THE MAXIMUM SPACING BETWEEN CONTRACTION JOINTS SHALL, IN ALL CASES, BE IN ACCORDANCE WITH STANDARD CONTSTRUCTION DRAWINGS AND THE SPECIFICATIONS.

PART-WIDTH CONSTRUCTION

BECAUSE OF THE NECESSITY OF BUILDING PORTIONS OF THIS PROJECT UNDER TRAFFIC AND CONSTRUCTING THE FULL PAVEMENT WIDTH IN STAGES, EXTREME CARE SHALL BE TAKEN TO PREVENT THE CONSTRUCTION OF A BUTT JOINT ON CENTERLINE IN THE BASE COURSES. LONGITUDINAL JOINTS SHALL BE LAPPED AS SHOWN ON STANDARD CONSTRUCTION DRAWING BP-5.

WORK UNDER R.R. UNDERPASS

WORK AT THE EXISTING R.R. UNDERPASS BETWEEN STATIONS 27+65 AND 29+25 SHALL CONSIST OF THE FOLLOWING ITEMS:

1. REMOVE EXISTING CONCRETE MEDIAN,
2. REMOVE EXISTING WEARING COURSE FOR THE FULL LENGTH AND WIDTH OF THIS SECTION TO THE EXTENT TO ACHIEVE THE REQUIRED TRANSITION PROFILE BETWEEN THE NEW AND EXISTING PAVEMENT,
3. REMOVE EXPOSED BRICK PAVEMENT (IF ANY) AND REPLACE WITH ITEM 301 BITUMINOUS AGGREGATE BASE,
4. SALVAGE EXISTING BASE AND REMOVE EXISTING CURBS BY SAW-CUTTING AT PROPOSED CURB LINE,
5. REPLACE EXISTING CURB WITH ITEM 609 CURB, TYPE 6,
6. REPLACE SIDEWALK NEXT TO BRIDGE ABUTMENTS WITH 4" ITEM 608 CONCRETE,
7. APPLY ITEM 407 TACK COAT AND COVER AGGREGATE OVER EXPOSED BASE,
8. RESURFACE THE 32' WIDE PAVEMENT USING ITEM 403 ASHPALT CONCRETE LEVELING COURSE FOLLOWED BY A 1-3/4" LAYER OF ITEM 402 ASHPALT CONCRETE, AC-20 ON A UNIFORM TRANITIONAL GRADE CONNECTING THE NEW CONCRETE APPROACH PAVEMENT TO THE EXISTING U.S.20 SECTION. CROSS SLOPE OF THE NEW PAVEMENT SHALL BE 2%. THE EXISTING MINIMUM VERTICAL CLEARANCES SHALL BE MAINTAINED OR IMPROVED UNDER THE STRUCTURE.

THE FOLLOWING QUANTITIES WILL BE CARRIED TO THE GENERAL SUMMARY FOR ABOVE OUTLINED WORK TO BE USED "AS DIRECTED BY THE ENGINEER" (SEE NOTE: CONTINGENCY QUANTITIES):

ITEM	DESCRIPTION	UNIT	QUANTITY
202	CONCRETE MEDIAN REMOVED	SY	47
202	CURB REMOVED	LIN.FT.	320
202	WEARING COURSE REMOVED	SY	570
202	BRICK PAVEMENT REMOVED, AS PER PLAN	SY	200
301	BITUMINOUS AGGREGATE BASE AC-20 OR RT-11 OR RT-12	CY	63
402	ASPHALT CONCRETE, AC-20	CY	28
403	ASPHALT CONCRETE, AC-20	CY	10
404	ASPHALT CONCRETE, AC-20	CY	20
407	TACK COAT	GAL	57
407	COVER AGGREGATE	TON	2
608	4" CONCRETE WALK	SF	630
609	CURB, TYPE 6	LF	320

TWO WAY TWO LANE TRAFFIC SHALL BE MAINTAINED AT ALL TIMES ACCORDING TO THE PROVISIONS OF SECTION 614(03)(C). THE ROAD SHALL STAY OPEN AT NIGHT (32' WIDTH).

ITEM 202 - BRICK PAVEMENT REMOVED, AS PER PLAN

BRICK PAVEMENT REMOVED SHALL CONSIST OF THE REMOVAL OF THE BRICK BASE AND ASPHALT WEARING SURFACE AND CUSHION COURSE AS APPLICABLE. PAVEMENT FOR THIS WORK IS INCLUDED UNDER ITEM 202 - BRICK PAVEMENT REMOVED, AS PER PLAN.

ITEM 407 - TACK COAT

THE TACK COAT AND COVER AGGREGATE OPERATION SHALL BE AS DETERMINED AT A PRE-CONSTRUCTION CONFERENCE AS PER 407.05. PLAN QUANTITIES INDECATE AVERAGE APPLICATION RATE OF 0.10 GALLONS PER SQUARE YARD OF TACK COAT AND 7 POUND PER SQUARE YARD OF COVER AGGREGATE.

SCALE
MADE DATE
TRCD DATE 10-84
CKD DATE 1-85

WOODRUFF, INC.
CONSULTING ENGINEERS
CLEVELAND OHIO

COMPUTATIONS AND SUB—SUMMARIES

QUANTITY CALCULATIONS
BY _____ DATE _____
CHKD. _____ DATE _____
WOODRUFF, INC.

F.H.W.A. REGION	STATE	PROJECT	
5	OHIO		

LAKE COUNTY
LAK-20-17.14

11
86

301 BITUMINOUS AGGREGATE BASE AC-20 RT-11, RT-12

STATION FROM	STATION TO	LENGTH LIN. FT.	WIDTH LIN.FT.	DEPTH INCHES	VOLUME CU. YDS.	REMARKS
10+88.45	11+79.08	91.63	Varies	6	101.06	CASEMENT AVE.-ERIE ST. INTERSECTION
11+79.08	13+18.37	139.29	25	6	64.49	CASEMENT AVE.
13+18.37	13+88.37	70	23	6	29.81	CASEMENT AVE.
13+88.37	14+50	61.63	21	6	23.97	CASEMENT AVE.
1+16	5+00	384	21	6	149.33	ERIE ST.
TOTAL					369	

404 ASPHALT CONCRETE AC-20

STATION FROM	STATION TO	LENGTH LIN. FT.	WIDTH LIN.FT.	DEPTH INCHES	VOLUME CU. YDS.	REMARKS
10+88.45	11+79.08	91.03	Varies	1	16.16	CASEMENT AVE. ERIE ST. INTERSECTION
11+79.08	13+18.37	139.29	24	1	10.32	CASEMENT AVE.
13+18.37	13+88.37	70	22 AVG.	1	4.75	CASEMENT AVE.
13+88.37	14+50	61.63	20	1	3.80	CASEMENT AVE.
1+16	5+00	384	20	1	23.70	ERIE ST.
5+00	5+25	25	20	1¼ AVG.	1.93	ERIE ST. BUTT JOINT
14+50	14+75	25	20	1¼ AVG.	1.93	CASEMENT AVE. BUTT JT.
13+65	13+90	25	24	1¼ AVG.	2.31	RT. 20 BUTT JOINT
29+00	29+25	25	32	1¼ AVG.	3.09	RT. 20 BUTT JOINT
TOTAL					68	

411 STABILIZED CRUSHED AGGREGATE

STATION FROM	STATION TO	LENGTH LIN. FT.	WIDTH LIN.FT.	DEPTH INCHES	VOLUME CU. YDS.	REMARKS
10+88.45	14+50	362	4	6	26.81	CASEMENT AVE. (RT.)
11+79.08	14+50	270.92	4	6	20.07	CASEMENT AVE. (LT.)
11+79.08	1+16	131	4	6	9.70	CASEMENT AVE. ERIE ST. INTERSECTION
1+16	5+00	384	4	6	28.44	ERIE ST. (RT.)
1+16	5+00	384	4	6	28.44	ERIE ST. (LT.)
10+88.45	1+16	95	4	6	7.04	ERIE ST. (LT.)
TOTAL					121	

ITEM 310 - SUBBASE, TYPE II

STATION FROM	STATION TO	LENGTH LIN. FT.	WIDTH LIN.FT.	DEPTH INCHES	VOLUME CU.YDS.	REMARKS
13+90	27+65	3820 SY	451	6	636.7	SEE #1 PAVEMENT AREA
10+88.5	11+79.08	91.3	Varies	6	99.91	CASEMENT AVE. ERIE ST. INTERSECTION
11+79.08	13+18.37	139.29	26	6	67.07	CASEMENT AVE.
13+18.37	13+ .37	70	24 Avg.	6	31.11	CASEMENT AVE.
13+88.37	14+50	61.63	22	6	25.11	CASEMENT AVE.
1+16	5+00	384	22	6	156.44	ERIE ST.
TOTAL					1017	

408 BITUMINOUS PRIME COAT

STATION FROM	STATION TO	LENGTH LIN. FT.	WIDTH LIN. FT.	RATE GAL./S.Y.	VOLUME GAL.	REMARKS
10+88.45	14+50	362	4	0.40	64.36	CASEMENT AVE. (RT.)
11+79.08	14+50	270.92	4	0.40	48.16	CASEMENT AVE. (LT.)
11+79.08	1+16	131	4	0.40	23.29	CASEMENT AVE-ERIE ST. INTERSECTION
1+16	5+00	384	4	0.40	68.27	ERIE ST. (RT.)
1+16	5+00	384	4	0.40	68.27	ERIE ST. (LT.)
10+88.45	1+16	95	4	0.40	16.89	
TOTAL					290	

451 9" REINFORCED CONCRETE PAVEMENT

STATION FROM	STATION TO	LENGTH LIN. FT.	WIDTH LIN.FT.		AREA SQ. YDS.	REMARKS
13+90	18+66	476	29		1533.80	
23+14.66	24+48.63	134.07	37.35 Avg.		556.39	
10+22.84	10+88.5	65.21	Varies		370.44	RT. 20 - CASEMENT AVE. INTERSECTION (SCALED)
24+48.63	25+66.14	117.51	41		535.32	
25+66.14	27+65.00	198.86	37 AVG.		817.54	
TOTAL					3820	

402 ASPHALT CONCRETE AC-20

STATION FROM	STATION TO	LENGTH LIN. FT.	WIDTH LIN.FT.	DEPTH INCHES	VOLUME CU. YDS.	REMARKS
10+88.45	11+79.08	91.63	Varies	1½	24.21	CASEMENT AVE.-ERIE ST. INTERSECTION
11+79.08	13+18.37	139.29	24	1½	15.48	CASEMENT AVE.
13+18.37	13+88.37	70	22 AVG.	1½	7.13	CASEMENT AVE.
13+88.37	14+50	61.63	20	1½	5.71	CASEMENT AVE.
1+16	5+00	384	20	1½	35.56	ERIE ST.
5+00	5+12.50	12.50	20	⅞ AVG.	0.65	ERIE ST. BUTT JOINT
14+50	14+75	25	20	⅞ AVG.	1.35	CASEMENT RD. BUTT JT.
13+77.50	13+90	12.50	24	⅞ AVG.	0.81	RT. 20 BUTT JOINT
29+00	29+12.5	12.50	32	⅞ AVG.	1.08	RT. 20 BUTT JOINT
TOTAL					92	

409 SEAL COAT BITUMINOUS MATERIAL

STATION FROM	STATION TO	LENGTH LIN. FT.	WIDTH LIN.FT.	RATE GAL./S.Y.	VOLUME GAL.	REMARKS
10+88.45	14+50	362	4	0.30	48.27	CASEMENT AVE. (RT.)
11+79.08	14+50	270.92	4	0.30	36.12	CASEMENT AVE. (LT.)
11+79.08	1+16	131	4	0.30	17.47	CASEMENT AVE. ERIE ST. INTERSECTION
1+16	5+00	384	4	0.30	51.20	ERIE ST. (RT.)
1+16	5+00	384	4	0.30	51.20	ERIE ST. (LT.)
10+88.45	1+16	95	4	0.30	12.67	
TOTAL					217	

409 SEAL COAT COVER AGGREGATE NO. 8

STATION FROM	STATION TO	LENGTH LIN. FT.	WIDTH LIN.FT.	RATE C.Y./S.Y.		VOLUME CU. YDS.	
10+89	14+50	362	4	0.008		1.29	Casement Ave. (RT)
11+79.08	14+50	270.92	4	0.008		0.96	Casement Ave. (Lt.)
11+79.08	1+16	131	4	0.008		0.72	Casement-Erie St. Intersection
1+16	5+00	384	4	0.008		1.37	Erie St. (Rt)
1+16	5+00	384	4	0.008		1.37	Erie St. (Lt.)
1+88.45	1+16	95	4	0.008		0.34	
TOTAL						6	

SCALE _____
MADE _____ DATE _____
TRCD. _____ DATE _____
CKD. _____ DATE _____

WOODRUFF, INC.
CONSULTING ENGINEERS
CLEVELAND OHIO

U.S. 20 OVER GRAND RIVER

COMPUTATIONS AND SUB—SUMMARIES

QUANTITY CALCULATIONS
BY ____ DATE ____
CHKD. ____ DATE ____
WOODRUFF, INC.

F.H.W.A. REGION	STATE	PROJECT	
5	OHIO		

LAKE COUNTY
LAK-20-17.14

12
86

609 CURB , STANDARD TYPE 2-A

STATION FROM	STATION TO	SIDE			LENGTH LIN. FT.	REMARKS
13+90	18+66	LT.			466.5	Less 6' @ No. 3 C.B. & 3.5' @ No. 3-A C.B.
13+90	18+66	RT.			466.5	Less 6' @ No. 3 C.B. & 3.5' @ No. 3-A C.B.
23+14.56	27+65	LT.			450.44	Less 3.5' Per Each No. 3-A C.B.
23+14.56	23+67.15	RT.			52.59	
23+67.15	24+86.78	RT.			284	RT. 20 - CASEMENT INTERSECTION
24+86.78	27+65	RT.			278.22	
TOTAL					1999	

605 6" UNCLASSIFIED PIPE UNDERDRAINS

All Quantities Reflect a 10' Reduction Per C.B. on Continuous Grade & 20' Reduction Per C.B. in Sag.

STATION FROM	STATION TO	SIDE			LENGTH LIN. FT.	REMARKS
13+90	18+66	LT.			446.00	
13+90	18+66	RT.			446.00	
23+20	27+25	LT.			375.00	
TOTAL					1267	

202 PAVEMENT REMOVED

STATION FROM	STATION TO	LENGTH LIN. FT.	WIDTH LIN. FT.		AREA SQ. YDS.	REMARKS
U.S. RT. 20 WEST APPROACH						
		477	24		1272	
	EAST APPROACH					
		428	VARIES		2820	
TOTAL					4092	

611 REINFORCED CONCRETE APPROACH SLAB (T= 15")

STATION FROM	STATION TO	LENGTH LIN. FT.	WIDTH LIN.FT.		AREA SQ. YDS.	REMARKS
U.S. RT. 20 WEST APPROACH						
18+86	18+91				81	
	EAST APPROACH					
22+89.56	23+14.56				94	
TOTAL					175	

203 SUBGRADE COMPACTION

STATION FROM	STATION TO	LENGTH LIN.FT.	WIDTH LIN. FT.		AREA SQ. YDS.	REMARKS
U.S. RT. 20						
13+90	18+66	476	32		1692.44	
23+14.56	24+48.63	134.07	40.35		601.08	
10+22.84	10+88.45	65.21	VARIES		376.44	
24+48.63	25+66.14	117.51	44		574.49	
25+66.14	27+65.00	198.86	40		883.82	
CASEMENT AVENUE						
10+88.45	11+79.08	91.63	VARIES		101.06	
11+79.08	13+18.37	139.29	28		433.36	
13+18.37	13+88.37	70	26		202.22	
13+88.37	14+50	61.63	24		164.35	
ERIE STREET						
1+16	5+00	384	24		1024.00	
TOTAL					6054	

ITEM 203 EARTHWORK & EROSION CONTROL SUB-SUMMARIES

SHEET NO.	STATION		203 EXCAVATION NOT INCLUDING EMBANKMENT CONSTRUCTION	203 EMBANKMENT	203 EXCAVATION AS PER PLAN "A"	203 EMBANKMENT AS PER PLAN "A"	203 EMBANKMENT AS PER PLAN "B"	203 EMBANKMENT AS PER PLAN	659 SEEDING & MULCHING	670 SLOPE EROSION PROTECTION	670 DITCH EROSION PROTECTION	207 TEMPORARY SEEDING & MULCHING	TOTAL 659 670 670 207 ROWS TO LEFT	659 COMMERCIAL FERTILIZER	659 AGRICULTURAL LIMING
			CU. YDS	CU. YDS.	CU. YDS.	CU. YDS.	CU. YDS.	CU. YDS	SQ. YDS.	SQ. YDS	SQ. YDS.	SQ. YDS.		TONS	TONS
10			10												
18			3440	5002				1960		1141			1141	0.10	0.51
	U.S. 20														
19	13+90	14+00	4	6					54				54	0.00	0.02
20	14+00	16+00	40	1076					1509				1509	0.14	0.68
21	16+00	17+50	0	3086	1861	513	1723		1699			1079	2778	0.25	1.25
22	17+50	18+62 LT 18+81 RT	0	6412	2949	1374	3832		1912			1802	3714	0.33	1.67
23	23+30	24+24.51	2402	226					2338				2338	0.21	1.05
24	24+24.51	26+00	2723	1713					4059				4059	0.37	1.83
25	26+00	29+00	0	2,485					1851				1851	0.17	0.83
	CASEMENT AVENUE														
26	0+88.45	11+00	293	0					108				108	0.01	0.05
27	11+00	13+50	2640	120					2402				2402	0.22	1.08
28	13+50	14+75	350	0					777				777	0.07	0.34
	ERIE STREET EXTENSION														
30	0+60	3+50	642	2260					2249				2249	0.20	1.01
31	3+50	5+25	417	722					1395				1395	0.13	0.63
33				3481					820		189		1009	0.09	0.45
36	10+23	10+88	2350						592				592	0.05	0.27
38											125		125	0.01	0.06
		TOTAL	15,311	26,589	4,810	1,887	5,555	1,960	21,765	1,141	314	2,881	26,101	2.35	11.75

SCALE ____
MADE ____ DATE ____
TRCD. ____ DATE ____
CKD. ____ DATE ____

WOODRUFF, INC.
CONSULTING ENGINEERS
CLEVELAND OHIO

U.S. 20 OVER GRAND RIVER

MICROFILMED
MAY 8 1992

GENERAL SUMMARY

QUANTITY CALCULATIONS
BY C.E.R. DATE 9-85
CHKD. I.M. DATE 9-85
WOODRUFF, INC.

F.A. Rte. Section	STATE	PROJECT	
5	OHIO		

LAKE COUNTY
LAK-20-17.14

13
86

ITEM	SHEET NO. 8	9	10	12	16	17	29	32	33	40	TOTAL QUANT	UNIT	DESCRIPTION
													ROADWAY
201		LUMP									201 LUMP		CLEARING AND GRUBBING
202			200								200	SQ. YDS.	BRICK PAVEMENT REMOVED, AS PER PLAN
202				4092				344			4436	SQ. YDS.	PAVEMENT REMOVED
202			320								320	LIN. FT.	CURB REMOVED
202			47								47	SQ. YDS.	CONCRETE MEDIAN REMOVED
202			570								570	SQ. YDS.	WEARING COURSE REMOVED
202					400						400	LIN. FT.	GUARD RAIL REMOVED
202						2					2	EACH	MANHOLE REMOVED
202					2	5					7	EACH	CATCH BASIN REMOVED
202						590					590	LIN. FT.	PIPE REMOVED, 24" AND UNDER
203				15311							15,311	CU. YDS.	EXCAVATION NOT INCLUDING EMBANKMENT CONSTRUCTION
203				26589							26589	CU. YDS.	EMBANKMENT
203				4810							4810	CU. YDS.	EXCAVATION AS PER PLAN
203				1887							1887	CU. YDS.	EMBANKMENT AS PER PLAN "A"
203				5555							5555	CU. YDS.	EMBANKMENT AS PER PLAN "B"
203				1960							1960	CU. YDS.	EMBANKMENT, AS PER PLAN
				6054							6054	SQ. YDS.	SUBGRADE COMPACTION
404	100										100	CU. YDS.	BITUMINOUS CONCRETE FOR MAINTAINING TRAFFIC
410	400										400	CU. YDS.	TRAFFIC COMPACTED SURFACE, TYPE A OR B
604					2	5	4				11	EACH	MONUMENT ASSEMBLIES, *Standard*
606								43.75			43.75	LIN. FT.	GUARD RAIL, TYPE 4
606					518.75	350					868.75	LIN. FT.	GUARD RAIL, TYPE 5
606					4	2					6	EACH	BRIDGE TERMINAL ASSEMBLY, STANDARD TYPE "A"
606						1					1	EACH	BRIDGE TERMINAL ASSEMBLY, STANDARD TYPE "A" *Mod. as per plan*
606					2	2					4	EACH	ANCHOR ASSEMBLY, STANDARD TYPE "A"
606						1					1	EACH	ANCHOR ASSEMBLY, STANDARD TYPE "B"
606					2	1					3	EACH	ANCHOR ASSEMBLY, STANDARD TYPE "T"
607								2			2	EACH	GUARD POST, AS PER PLAN *See Sht. 32*
607								299			299	LIN. FT.	FENCE, TYPE CL, AS PER PLAN *See Sht. 32*
607								1			1	EACH	24' GATE, *AS PER PLAN* *See Sht. 32*
608			630								630	SQ. FT.	4" CONCRETE WALK
616	200										200	M. GALS.	WATER
616	34										34	TONS	CALCIUM CHLORIDE
													EROSION CONTROL
207		3100		2881							5981	SQ. YDS.	TEMPORARY SEEDING AND MULCHING
207		72									72	EACH	STRAW OR HAY BALES
207		110									110	LIN. FT.	TEMPORARY SLOPE DRAINS
207		550									550	CU. YDS.	TEMPORARY BENCHES, DIKES, DAMS AND SEDIMENT BASINS
207		110									110	LIN. FT.	FILTER FABRIC FENCE
601						6				14	20	SQ. YDS.	RIP-RAP, USING 6" REINFORCED CONCRETE SLAB
601						6					6	CU. YDS.	ROCK CHANNEL PROTECTION TYPE "A" WITH FILTER
601										10	10	CU. YDS.	ROCK CHANNEL PROTECTION TYPE "B" WITH FILTER
601		4									4	CU. YDS.	ROCK CHANNEL PROTECTION TYPE "C" WITHOUT FILTER
659		68									68	M. SQ. FT.	MOWING
659		23									23	M. GAL.	WATER
659				21765							21765	SQ. YDS.	SEEDING AND MULCHING
659		760									760	SQ. YDS.	REPAIR SEEDING AND MULCHING
659				11.75							11.75	TONS	AGRICULTURAL LIMING
659		0.14		2.35							2.49	TON	COMMERCIAL FERTILIZER
670				1141							1141	SQ. YDS.	SLOPE EROSION PROTECTION
670				314							314	SQ. YDS.	DITCH EROSION PROTECTION

SCALE
MADE C.E.R. DATE 9-85
TRCD. M.A.G. DATE 9-85
CKD. I.M. DATE 9-85

WOODRUFF, INC.
ARCHITECTS • ENGINEERS & PLANNERS
23875 COMMERCE PARK RD. 216/464-4600
CLEVELAND, OHIO 44122

U.S. 20 OVER GRAND RIVER

MICROFILMED
MAY 6 1992

GENERAL SUMMARY

QUANTITY CALCULATIONS
BY C.E.R. DATE 9-85
CHKD. I.M. DATE 9-85
WOODRUFF, INC.

FED. ROAD CODE	STATE	PROJECT	
5	OHIO		

LAKE COUNTY
LAK-20-17.14

ITEM	SHEET NO. 10	11	12	16	17	32	33	36	38	40	ITEM	TOTAL QUANT	UNIT	DESCRIPTION
														DRAINAGE
602				5.8	2.2	0.2				9.4	602	17.6	CU. YDS.	CONCRETE MASONRY
603									52		603	52	LIN. FT.	6" CONDUIT, TYPE B
603				90	40	30			20		603	180	LIN. FT.	6" CONDUIT, TYPE F
603				134	172	66					603	372	LIN. FT.	12" CONDUIT, TYPE B
603				76							603	76	LIN. FT.	12" CONDUIT, TYPE B 706.02 2000 D-LOAD
603				93	30						603	123	LIN. FT.	12" CONDUIT, TYPE C
603				70							603	70	LIN. FT.	12" CONDUIT, TYPE C 706.02 2000 D-LOAD
603					275						603	275	LIN. FT.	18" CONDUIT, TYPE B
603					122						603	122	LIN. FT.	18" CONDUIT, TYPE C
603					86						603	86	LIN. FT.	18" CONDUIT, TYPE C, 707.13 OR 707.14
603										54	603	54	LIN. FT.	30" CONDUIT, TYPE A, 706.02 2000 D-LOAD
603				59							603	59	LIN. FT.	42" CONDUIT, TYPE B, 706.02 2000 D-LOAD
603				467							603	467	LIN. FT.	42" CONDUIT, TYPE C, 706.02 2000 D-LOAD
604					1						604	1	EACH	CATCH BASIN, STANDARD NO. 2-2-A
604				1							604	1	EACH	CATCH BASIN, STANDARD NO. 2-2-B
604				2							604	2	EACH	CATCH BASIN, STANDARD NO. 3, WITH "V" GRATE
604				7	3						604	10	EACH	CATCH BASIN, STANDARD NO. 3-A WITH "V" GRATE
604					2						604	2	EACH	CATCH BASIN, STANDARD NO. 5, WITH "B" GRATE
604						2					604	2	EACH	CATCH BASIN, STANDARD NO. 6
604					3						604	3	EACH	MANHOLE, STANDARD NO. 1
604				5							604	5	EACH	MANHOLE, STANDARD NO. 3
605				32				40			605	72	LIN. FT.	6" SHALLOW PIPE UNDERDRAINS, 707.01 TYPE III OR 707.21 TYPE III
605			1267			340		133	2154		605	3894	LIN. FT.	6" UNCLASSIFIED PIPE UNDERDRAINS AS PER PLAN
														PAVEMENT
301	63	369									301	432	CU. YDS.	BITUMINOUS AGGREGATE BASE AC-20, RT-11, RT-12
310		1017					146				310	1163	CU. YDS.	SUBBASE, TYPE II
402	28	92									402	120	CU. YDS.	ASPHALT CONCRETE, AC-20
403	10										403	10	CU. YDS.	ASPHALT CONCRETE, AC-20
404	20	68									404	88	CU. YDS.	ASPHALT CONCRETE, AC-20
407	57										407	57	GALS.	TACK COAT
408		217					165				408	382	GALS.	BITUMINOUS PRIME COAT
409		290					124				409	414	GALS.	SEAL COAT BITUMINOUS MATERIAL
409		6					4				409	10	CU. YDS.	SEAL COAT COVER AGGREGATE NO. 8
411		121					69				411	190	CU. YDS.	STABILIZED CRUSHED AGGREGATE
407	2										407	2	TON	COVER AGGREGATE
451		3820					796				451	4616	SQ. YDS.	9" REINFORCED CONCRETE PAVEMENT
609			1999								609	1999	LIN. FT.	CURB, STANDARD TYPE 2-A
609	320										609	320	LIN. FT.	CURB, STANDARD TYPE 6
611			175								611	175	SQ. YDS.	REINFORCED CONCRETE APPROACH SLAB (T=15")
SPECIAL				29	38						SPECIAL	67	LIN. FT.	PRESSURE RELIEF JOINT, Standard Type A

SCALE
MADE C.E.R. DATE 9-85
TRCD. M.A.G. DATE 9-85
CKD. I.M. DATE 9-85

WOODRUFF, INC.
ARCHITECTS • ENGINEERS & PLANNERS
23875 COMMERCE PARK RD. 216/464-4600
CLEVELAND, OHIO 44122

U.S. 20 OVER GRAND RIVER

GENERAL SUMMARY

QUANTITY CALCULATIONS
BY C.E.R. DATE 9-85
CHKD. I.M. DATE 9-85
WOODRUFF, INC.

F.A.P.W.A. REGION	STATE	PROJECT	
5	OHIO		

LAKE COUNTY
LAK-20-17.14

15 / 86

ITEM	SHEET NO. 7	38	39	42	70	76	PARTICIPATION 100% CITY OF PAINESVILLE	ITEM	TOTAL QUANT	UNIT	DESCRIPTION
											TRAFFIC CONTROL
621				0.51				621	0.51	MILES	CENTERLINES
621				136				621	136	LIN. FT.	CHANNELIZING LINES
621				57				621	57	LIN. FT.	STOP LINES
621				105				621	105	LIN. FT.	TRANSVERSE LINES
621				3				621	3	EACH	LANE ARROWS
621				3				621	3	EACH	WORD "ONLY" ON PAVEMENT, 72 IN.
630				13				630	13	SQ. FT.	SIGNS, FLAT SHEET, TYPE G SHEETING
630				86				630	86	SQ. FT.	SIGNS, FLAT SHEET
630				221				630	221	LIN. FT.	GROUND MOUNTED SUPPORTS, NO. 3 POST
630				26				630	26	EACH	REMOVAL OF GROUND MOUNTED SIGN AND STORAGE
630				19				630	19	EACH	REMOVAL OF GROUND MOUNTED POST SUPPORT
				0.51				614	0.51	MILE	TEMPORARY CENTER LINES, CLASS II
				136				614	136	LIN. FT.	TEMPORARY CHANNELIZING LINES, CLASS I
											RETAINING WALL
											SEE SHEET NO. 47 FOR ESTIMATED QUANTITIES
											STRUCTURES OVER 20' SPAN
											STRUCTURE LAK-20-1714 SEE SHEET NO. 52 FOR ESTIMATED QUANTITIES
											WATERWORK
202					257		257	202	257	LIN. FT.	WATER MAIN REMOVED FOR STORAGE
SPECIAL			1			1	2	SPECIAL	2	EACH	12" CUTTING-IN VALVE, COMPLETE
SPECIAL		1					1	SPECIAL	1	EACH	EXTEND HYDRANT BRANCH
SPECIAL		1				1	2	SPECIAL	2	EACH	HYDRANT ASSEMBLY ADJUSTED TO GRADE
604		1					1	604	1	EACH	WATER MANHOLE ADJUSTED TO GRADE
604		1				1	2	604	2	EACH	WATER VALVE BOX ADJUSTED TO GRADE
614	LUMP							614	LUMP		MAINTAINING TRAFFIC
619								619	LUMP		FIELD OFFICE
623								623	LUMP		CONSTRUCTION LAYOUT STAKES
624								624	LUMP		MOBILIZATION

SCALE
MADE C.E.R. DATE 9-85
TRCD. M.A.G. DATE 9-85
CKD. I.M. DATE 9-85

WOODRUFF, INC.
ARCHITECTS • ENGINEERS & PLANNERS
23875 COMMERCE PARK RD. 216/464-4600
CLEVELAND, OHIO 44122

U.S. 20 OVER GRAND RIVER

F.H.W.A. REGION	STATE	PROJECT	
5	OHIO		

16
86

LAK-20-17.14

BENCH MARK
Top of Hydrant @ Corner of Fobes Street & U.S. 20, Elev. = 655.46

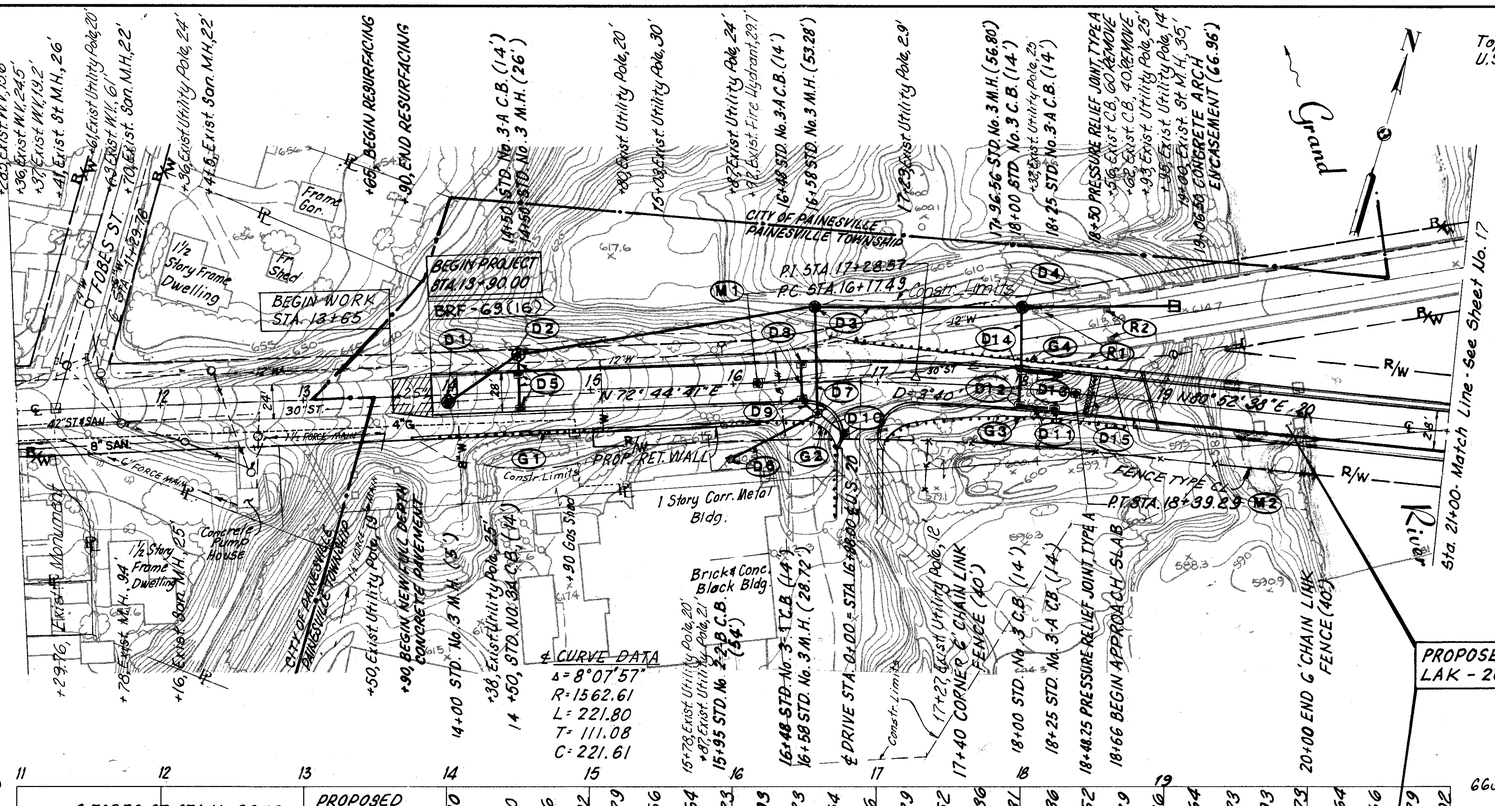

QUANTITY CALCULATIONS
BY C.E.R. DATE 9-85
CHKD. I.M. DATE 9-85
WOODRUFF, INC.

GUARDRAIL

REF. NO.	SIDE	STATION FROM	STATION TO	606 GUARD-RAIL, TYPE 5 LIN. FT.	606 ANCHOR ASSEMBLY TYPE A EACH	606 BRIDGE TERMINAL ASSEMBLY TYPE A EACH	606 ANCHOR ASSEMBLY TYPE T EACH		
G 1	RT.	13+75	15+00	100	1	1			
G 2	RT.	16+16		68.75		1	1		
G 3	RT.	17+07.45	18+79.24	175		1	1		
G 4	LT.	16+70	16+91.64	175	1	1			
		TOTAL		518.75	2	4	2		

MONUMENT

REF. NO.	SIDE	STATION FROM	STATION TO	604 MONU-MENT ASSEMBLY EACH		
M 1	℄	16+17.49		1		
M 2	℄	18+39.29		1		
		TOTAL		2		

REMOVAL

REF. NO.	SIDE	STATION FROM	STATION TO	LIN. FT.	202 GUARD-RAIL REMOVED	202 CATCH BASIN REMOVED EACH		
R-1	LT.-RT.	16+65	18+65	400				
R-2	LT.	18+50				2		
		TOTAL		400		2		

DRAINAGE

REF. NO.	SIDE	STATION FROM	STATION TO	602 CONCRETE MASONRY CU. YDS.	603 12" CONDUIT TYPE B LIN. FT.	603 12" CONDUIT TYPE C LIN. FT.	603 12" CONDUIT TYPE B 2000 D-LOAD LIN. FT.	603 12" CONDUIT TYPE C 2000 D-LOAD LIN. FT.	603 42" CONDUIT TYPE B 706.02 2000 D-LOAD LIN. FT.	603 42" CONDUIT TYPE C 706.02 2000 D-LOAD LIN. FT.	603 42" CONDUIT NO. 3 STD. MANHOLE EACH	604 STD. NO. 3 CATCH BASIN WITH "V" GATE EACH	604 STD. NO. 3A CATCH BASIN WITH "V" GATE EACH	604 STD. NO. 2-2-B CATCH BASIN EACH	603 6" COMPOUT PIPE U.D. 707.01 TYPE III OR 707.21 TYPE III	605 6" SHALLOW PIPE U.D. 707.01 TYPE III	
D 1	RT.-LT.	14+00	14+50									1					
D 2	LT.	14+50	16+58									1					
D 3	LT.	16+58	17+96.56									1					
D 4	LT.	17+96.56	19+06.50	5.8								1	2		20		
D 5	RT.-LT.	14+50	16+58		28	12								1			
D 6	RT.	15+95	16+58					70									
D 7	RT.-LT.	16+58					76				1						
D 8	RT.-LT.	16+48			28								1	1	10		
D 9	RT.	16+48	16+58			14							1	1	10		
D 10	RT.	16+58	18+25			24							1	1	10		
D 11	RT.	18+00	18+25		25							1					
D 12	RT.-LT.	18+00			28										20		
D 13	RT.	18+00	18+25		25							1					
D 14	LT.	17+96.56	18+00			43											
D-15	LT.	18+55													20		
		TOTAL		5.8	134	93	76	70	59	467	3	7	7	1	90	32	32

REFERENCE

Bridge	Sh. No. 48 to 69
Cross Sections	Sh. No. 19 to 22
Retaining Wall	Sh. No. 46 & 47

REFERENCE

Sewer Profiles	Sheet No. 44
Driveway Details	Sh. No. 32 to 35
Guardrails	Sh. No. 37
Waterwork	Sh. No. 70 to 81

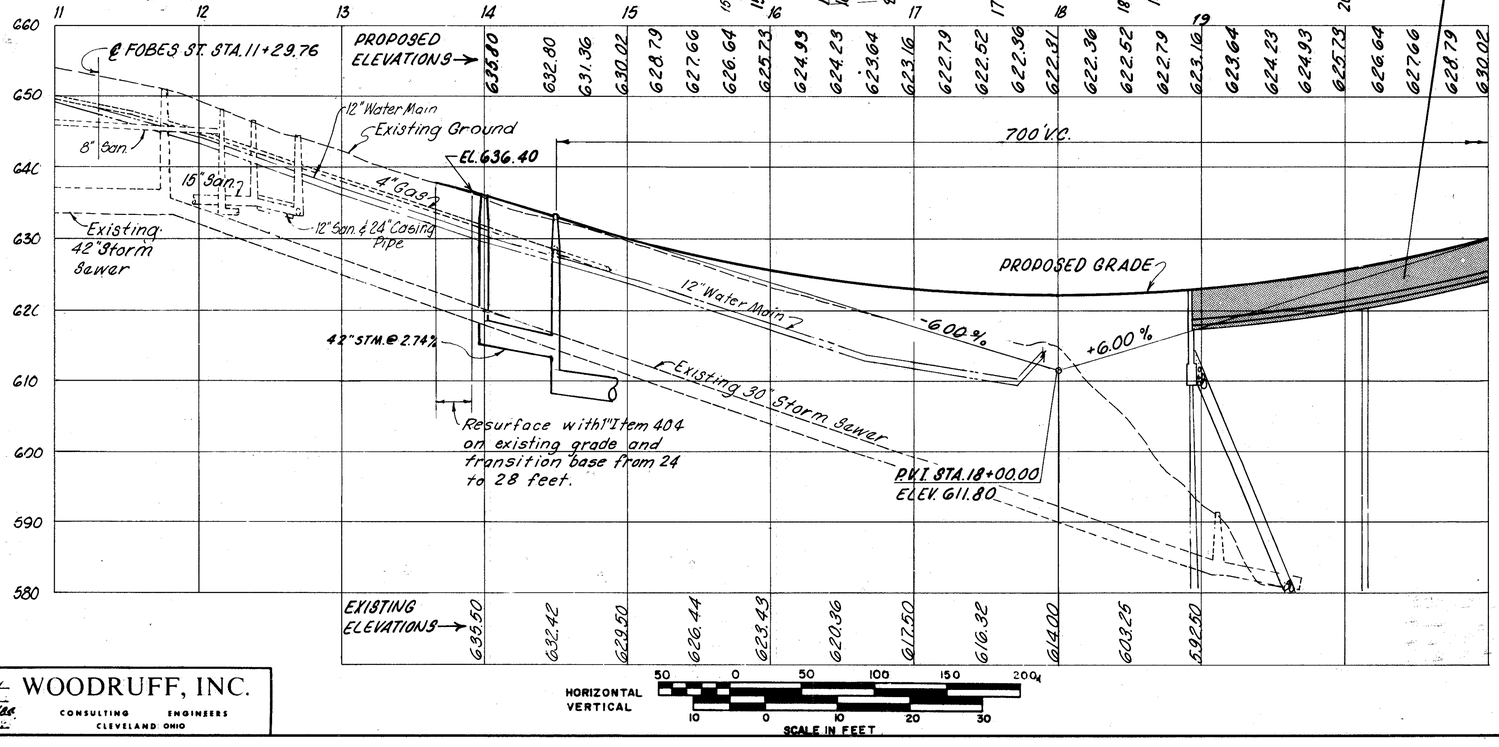

SCALE AS SHOWN
MADE CWL DATE 2-86
TRCD CWL DATE 4/86
CKD. DATE

WOODRUFF, INC.
CONSULTING ENGINEERS
CLEVELAND OHIO

U.S. 20 OVER GRAND RIVER

PLAN AND PROFILE STA. 11+00 TO STA. 21+00 (16)

F.H.W.A. REGION	STATE	PROJECT	
5	OHIO		

17 / 86

LAK-20-17,14

BENCH MARK
Cut on Southeast Wing Wall @ Railroad Underpass, Elev. = 650.23

SCALE IN FEET

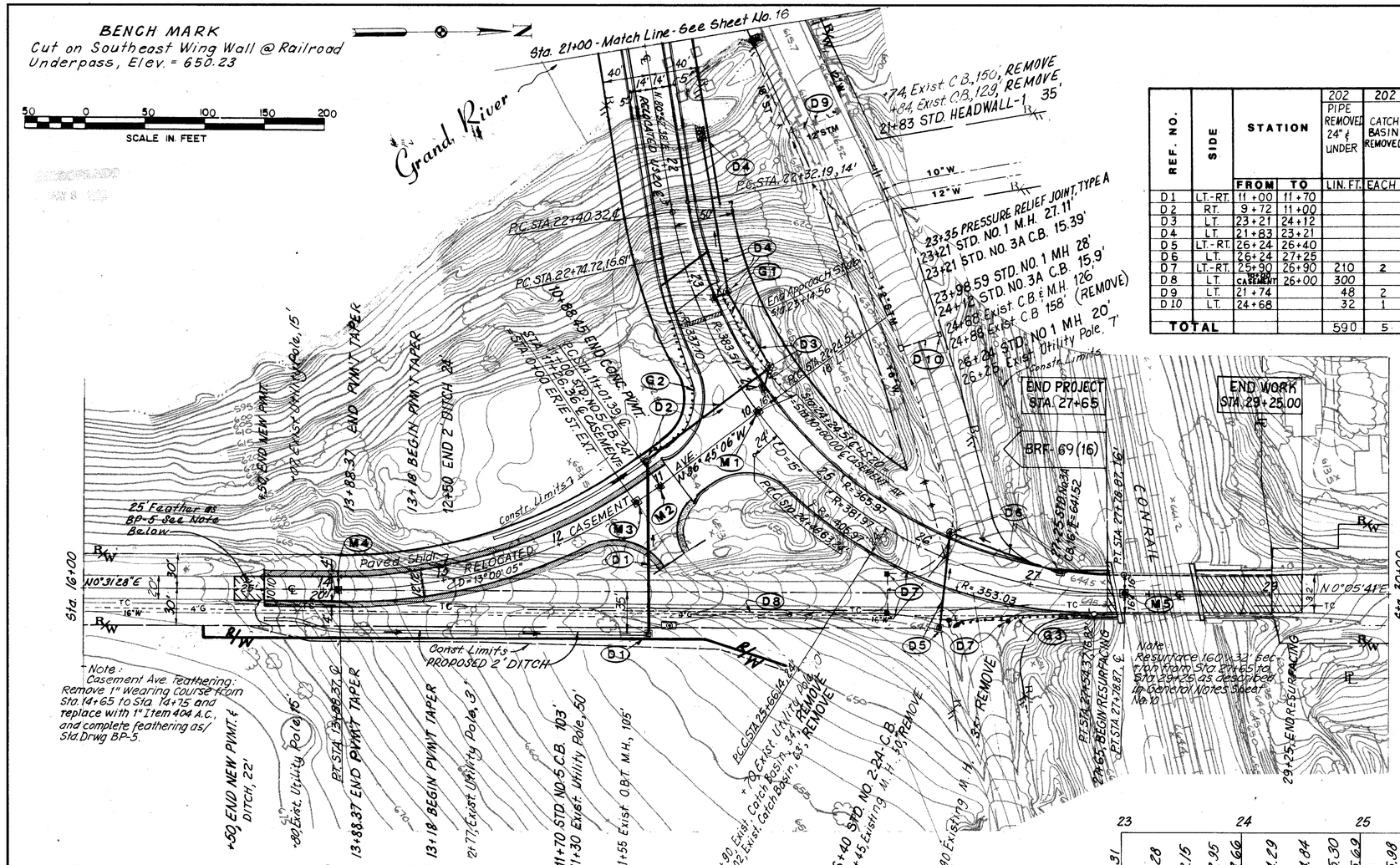

DRAINAGE

REF. NO.	SIDE	STATION FROM	STATION TO	202 PIPE REMOVED 24" & UNDER	202 CATCH BASIN REMOVED	601 RIP-RAP 6" REIN. CONCRETE SLAB	601 ROCK CHANNEL PROTECTION TYPE A W/ BEDDING	602 CONCRETE MASONRY	603 6" CONDUIT TYPE F	603 12" CONDUIT TYPE B	603 12" CONDUIT TYPE C	603 18" CONDUIT TYPE B	603 18" CONDUIT TYPE C	603 18" CONDUIT TYPE C 707.13 OR 707.14	603 STD. NO. 2-2-A CATCH BASIN	604 STD. NO. 1 M.H.	604 STD. NO. 3A CATCH BASIN W/ "V" GATE	604 STD. NO. 5 CATCH BASIN W/ "B" GATE	202 MANHOLE REMOVED
				LIN. FT.	EACH	CU. YD.	CU. YD.	CU. YD.	LIN. FT.	LIN. FT.	LIN. FT.	LIN. FT.	LIN. FT.	LIN. FT.	EACH	EACH	EACH	EACH	EACH
D 1	LT.-RT.	11+00	11+70									146						1	
D 2	RT.	9+72	11+00									129						1	
D 3	LT.	23+21	24+12						10		18		76			1	1		
D 4	LT.	21+83	23+21			6	6	2.2	10		12		46	86		1	1		
D 5	LT.-RT.	26+24	26+40							75					1				
D 6	LT.	26+24	27+25							97						1	1		
D 7	LT.-RT.	25+90	26+90	210	2				20										2
D 8	LT.	STA. 27+65 EASEMENT	26+00	300															
D 9	LT.	21+74		48	2														
D 10	LT.	24+68		32	1														
TOTAL				590	5	6	6	2.2	40	172	30	275	122	86	1	3	3	2	2

GUARDRAIL

REF. NO.	SIDE	STATION FROM	STATION TO	606 GUARD-RAIL TYPE 5	606 ANCHOR ASSEMBLY TYPE A	606 BRIDGE TERMINAL ASSEMBLY TYPE A	606 ANCHOR ASSEMBLY TYPE T	606 BRIDGE TERMINAL ASSEMBLY TYPE "A" AS PER PLAN	606 ANCHOR ASSEMBLY TYPE "B"
				LIN. FT.	EACH	EACH	EACH	EACH	EACH
G 1	LT.	24+45		100	1	1			
G 2	RT.	10+90		137.5		1	1		1
G 3	RT.	27+50		112.5	1			1	
TOTAL				350.0	2	2	1	1	1

MONUMENT

REF.	SIDE	STATION FROM	STATION TO	604 MONUMENT ASSEMBLY EACH	
M 1	℄	24+24.5		1	
M 2	℄	11+01.66		1	
M 3	℄	11+26.36		1	
M 4	℄	13+88.37		1	
M 5	℄	27+78.87		1	
TOTAL				5	

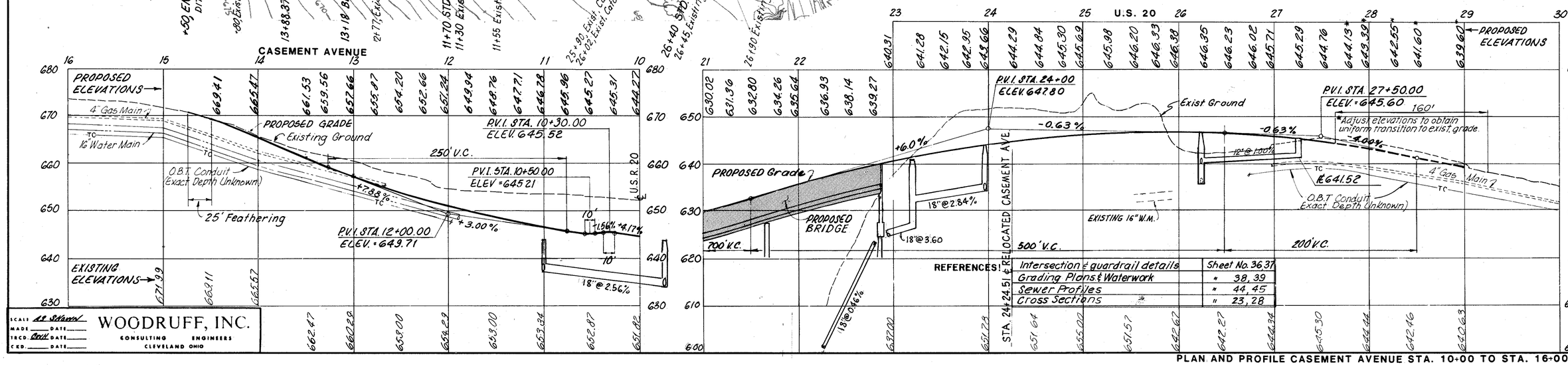

REFERENCES:

Intersection ℄ guardrail details	Sheet No. 36, 37
Grading Plans & Waterwork	" 38, 39
Sewer Profiles	" 44, 45
Cross Sections	" 23, 28

SCALE 1" = 10' Vertical
MADE ____ DATE ____
TRCD. Draft DATE ____
CKD. ____ DATE ____

WOODRUFF, INC.
CONSULTING ENGINEERS
CLEVELAND OHIO

U.S. 20 OVER GRAND RIVER

PLAN AND PROFILE CASEMENT AVENUE STA. 10+00 TO STA. 16+00
PLAN AND PROFILE U.S. 20 STA. 21+00 TO STA. 30+00

17

CROSS SECTION LAY—OUT SHEET

QUANTITY CALCULATIONS
BY CWH DATE 8/84
CHKD. MKC DATE 1-85
WOODRUFF, INC.

F.A.P. NO. REVISION	STATE	PROJECT	
5	OHIO		

LAKE COUNTY
LAK-20-17.14

18
86

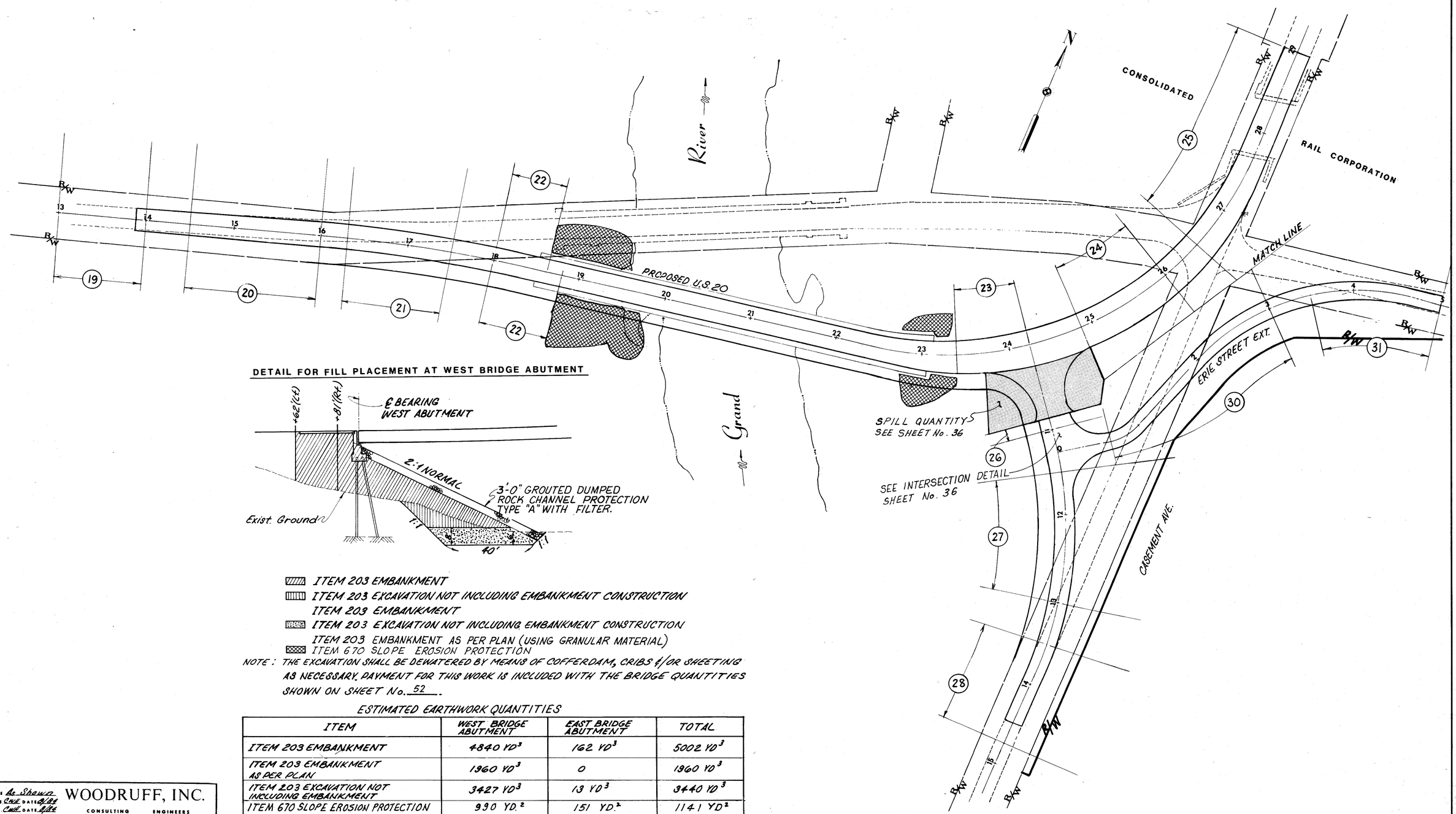

ITEM 203 EMBANKMENT

ITEM 203 EXCAVATION NOT INCLUDING EMBANKMENT CONSTRUCTION
ITEM 203 EMBANKMENT

ITEM 203 EXCAVATION NOT INCLUDING EMBANKMENT CONSTRUCTION
ITEM 203 EMBANKMENT AS PER PLAN (USING GRANULAR MATERIAL)

ITEM 670 SLOPE EROSION PROTECTION

NOTE: THE EXCAVATION SHALL BE DEWATERED BY MEANS OF COFFERDAM, CRIBS &/OR SHEETING AS NECESSARY. PAYMENT FOR THIS WORK IS INCLUDED WITH THE BRIDGE QUANTITIES SHOWN ON SHEET No. 52.

ESTIMATED EARTHWORK QUANTITIES

ITEM	WEST BRIDGE ABUTMENT	EAST BRIDGE ABUTMENT	TOTAL
ITEM 203 EMBANKMENT	4840 YD^3	162 YD^3	5002 YD^3
ITEM 203 EMBANKMENT AS PER PLAN	1960 YD^3	0	1960 YD^3
ITEM 203 EXCAVATION NOT INCLUDING EMBANKMENT	3427 YD^3	13 YD^3	3440 YD^3
ITEM 670 SLOPE EROSION PROTECTION	990 $YD.^2$	151 $YD.^2$	1141 YD^2

SCALE As Shown
MADE CWH DATE 8/84
TRCD. CWH DATE 8/84
CKD. MK DATE 1-85

WOODRUFF, INC.
CONSULTING ENGINEERS
CLEVELAND OHIO

U.S. 20 OVER GRAND RIVER

F.H.W.A. REGION	STATE	PROJECT	
5	OHIO		

19
86

LAKE COUNTY
LAK-20-17.14

SUB-SUMMARIES
SEEDING 54 SQ. YDS.
EXCAVATION 4 CU. YDS.
EMBANKMENT 6 CU. YDS.

SEEDING LIN FT.	SEEDING SQ YDS.	
65		
	54	
31		STA. 13+90

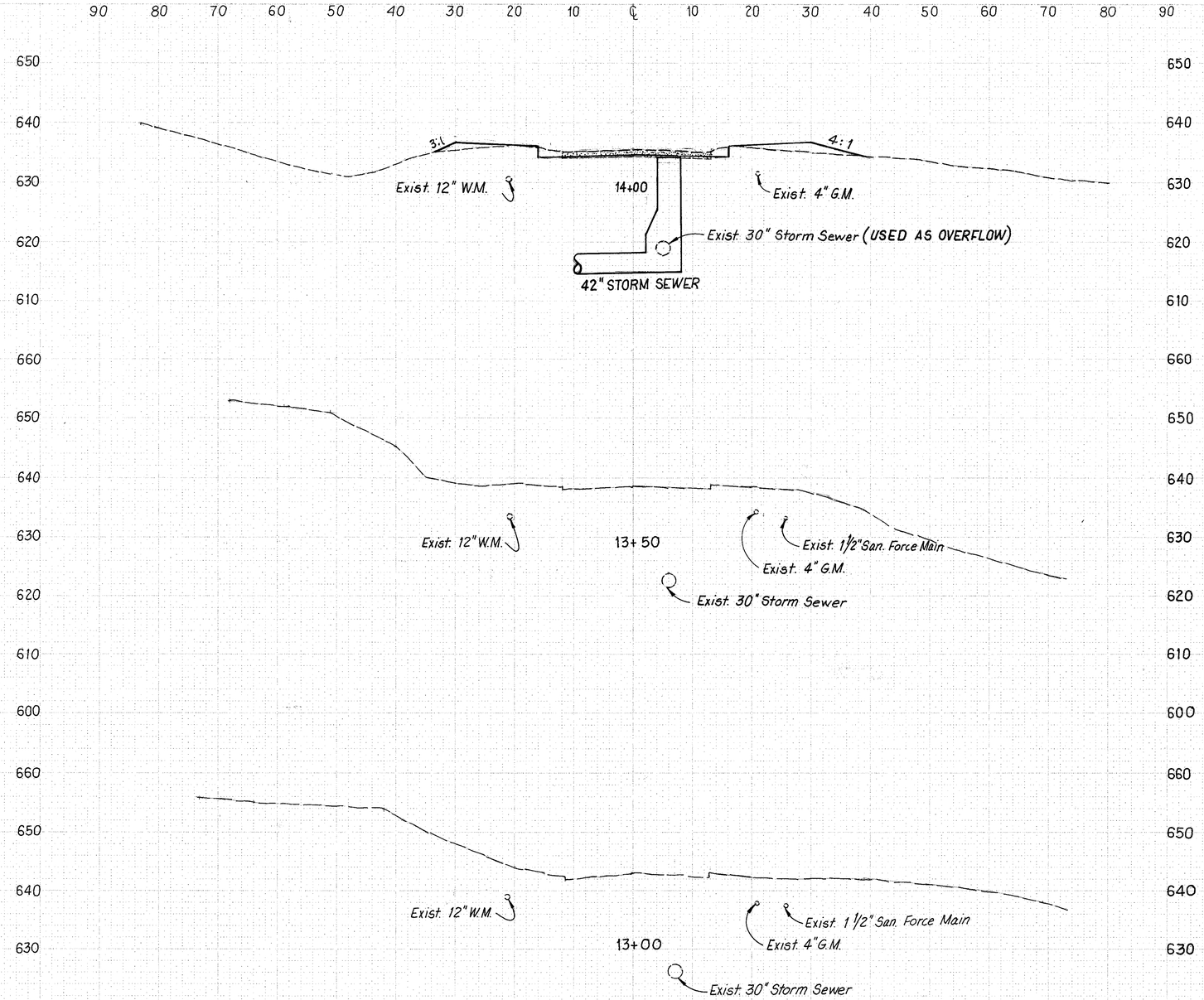

LEGEND
PAVEMENT REMOVED

	END AREA CUT	END AREA FILL	CU. YDS. CUT	CU. YDS. FILL
	10	32		
			4	6
STA. 13+90	10	0		

U.S. 20 OVER GRAND RIVER

PLATE 3 CROSS SECTION - DOTTED
CHARLES BRUNING COMPANY
MADE IN U.S.A.

BRUNING 37772

U.S. 20 CROSS SECTIONS STA. 13+00 TO STA. 14+00

19

F.H.W.A. REGION	STATE	PROJECT	
5	OHIO		

20
86

LAKE COUNTY
LAK-20-17.14

SUB-SUMMARIES
SEEDING 1509
EXCAVATION 40
EMBANKMENT 1076

SEEDING LIN. FT.	SEEDING SQ. YDS.	
45		
	264	
50		
278		
50 / 91		AHEAD / BACK
520		
96		
	447	

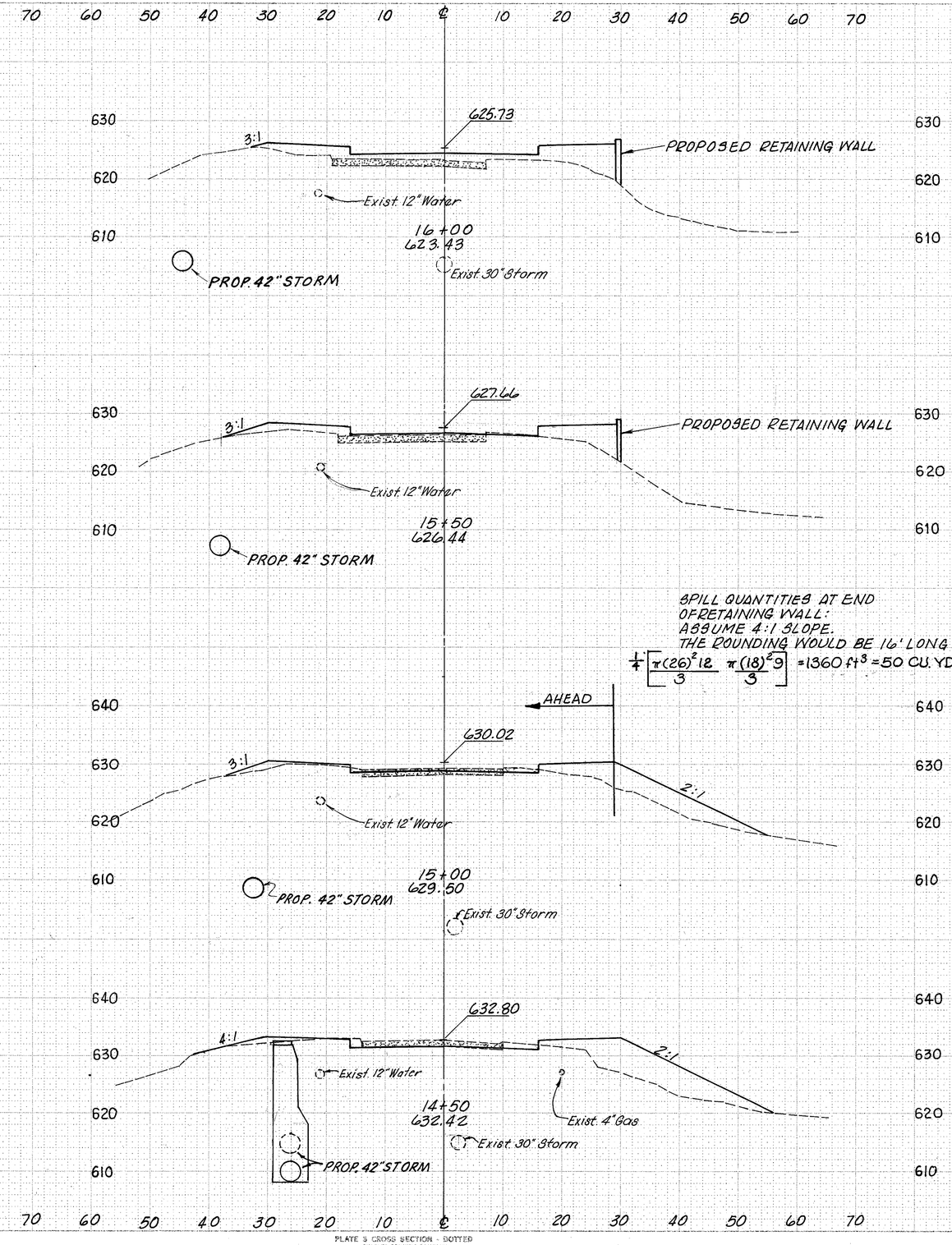

LEGEND
PAVEMENT REMOVED

STA.	END AREA CUT	END AREA FILL	CU. YDS. CUT	CU. YDS. FILL
	0	150		
			3	236
	3	105		
				100
			6	306
	3	60		
	3	135		
			12	265
	10	151		
			19	169
STA. 14+00	10	32		

U.S. 20 OVER GRAND RIVER

BRUNING 37772

PLATE 3 CROSS SECTION - DOTTED
CHARLES BRUNING COMPANY
MADE IN U.S.A.

U.S. 20 CROSS SECTIONS STA. 14+50 TO STA. 16+00

20

F.H.W.A. REGION	STATE	PROJECT	
5	OHIO		

21
86

LAKE COUNTY
LAK-20-17.14

SUB-SUMMARIES

SEEDING	1699 SQ. YDS.
TEMP. SEEDING	1079 SQ. YDS.
ITEM A	3086 CU. YDS.
ITEM B	0 CU. YDS.
ITEM C	1723 CU. YDS.
ITEM D	1861 CU. YDS
ITEM E	513 CU. YDS.

SEEDING LIN. FT.	SEEDING SQ. YDS.		TEMPORARY SEEDING LIN. FT.	TEMPORARY SEEDING SQ. YDS.
145			129	
	734			675
119			114	
	317			298
109			100	
				106
			90	
	483			
84		AHEAD		
54		BACK		
	165			

LEGEND

- ITEM A - EMBANKMENT
- ITEM B - EXCAVATION, NOT INCLUDING EMBANKMENT CONSTRUCTION
- ITEM C - EMBANKMENT, AS PER PLAN B
- ITEM D - EXCAVATION, AS PER PLAN A
- ITEM E - EMBANKMENT, AS PER PLAN A
- PAVEMENT REMOVED

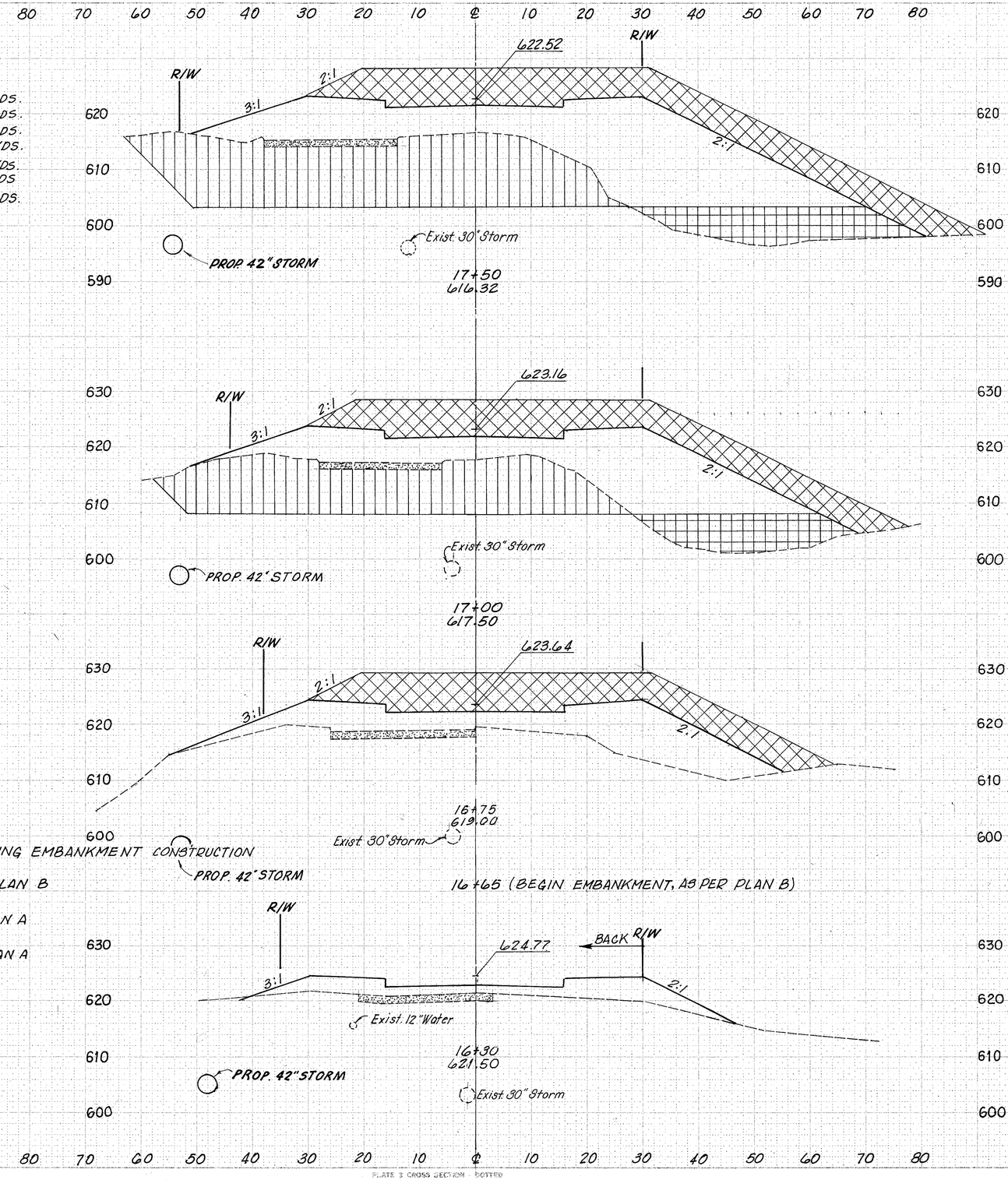

	END AREA CUT	END AREA FILL	CU. YDS. CUT	CU. YDS. FILL	
ITEMS A & B	0	1110			
ITEM C		635			
ITEMS D & E	941	250			
			0	1644	ITEMS A & B
			0	1120	ITEM C
			1531	419	ITEMS D & E
ITEMS A & B	0	665			
ITEM C		575			
ITEMS D & E	712	202			
			0	553	ITEMS A & B
				507	ITEM C
			330	94	ITEMS D & E
ITEMS A & B	0	520			
ITEM C	0	520			
ITEMS D & E	0	0			
				96	ITEM C
ITEM C		0			
			0	672	ITEMS A & B
(AHEAD) ITEMS A & B	0	277			
(BACK) ITEMS A & B	0	240			
				217	ITEMS A & B
STA. 16+00	0	150			

U.S. 20 OVER GRAND RIVER

U.S. 20 CROSS SECTIONS STA. 16+30 TO STA. 17+50

21

BRUNING 37772

PLATE 3 CROSS SECTION - DOTTED
CHARLES BRUNING COMPANY
MADE IN U.S.A.

FHWA REGION	STATE	PROJECT	
5	OHIO		

LAKE COUNTY
LAK-20-17.14

22/86

SUB-SUMMARIES

SEEDING	1912 SQ. YDS.
TEMP. SEEDING	1802 SQ. YDS.
ITEM A	6412 CU. YDS.
ITEM B	0 CU. YDS.
ITEM C	3832 CU. YDS.
ITEM D	2949 CU. YDS.
ITEM E	1374 CU. YDS.

ITEM 'C'
$.25(10)^2(5)(1/27)=5$
$1/2(18)(36)(20)\,1/27-100=140$
145

ITEM 'A'
SPILL QUANTITIES (LT)
R = 30', H = 13'
$.25(30)^2(13)(1/27)=108$
$1/2(12)(24)(30)(1/27)=160$
268 USE 300

ITEM 'A'
SPILL QUANTITIES (RT)
VOL. OF CONE = R^2H (SIMPL.)
R = 40', H = 21'
PORTIAL CONE = 90° = .25
$\frac{360°}{40^2}(21)(.25)(1/27)=311$ CU. YDS.

30' 20' 40'
$1/2(20)(40)\times30(1/27)=444$ CU. YDS.
755 USE 800
300
1100

ITEM 'C'
$1/4(52)^2(26)(1/27)-311=340$ C.Y.

30' 26' 52'
$1/27(1/2)(26)(52)(30)-444=307$
647
145
792
USE 800

1100 ITEM A
800 ITEM C

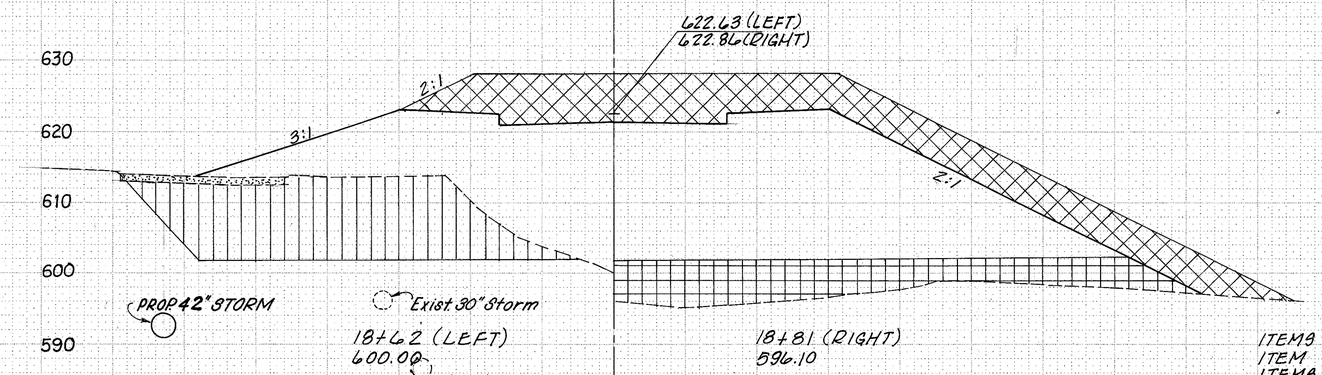

LEGEND

- ITEM A-EMBANKMENT
- ITEM B-EXCAVATION, NOT INCLUDING EMBANKMENT CONSTRUCTION
- ITEM C-EMBANKMENT, AS PER PLAN B
- ITEM D-EXCAVATION, AS PER PLAN A
- ITEM E-EMBANKMENT, AS PER PLAN A
- PAVEMENT REMOVED

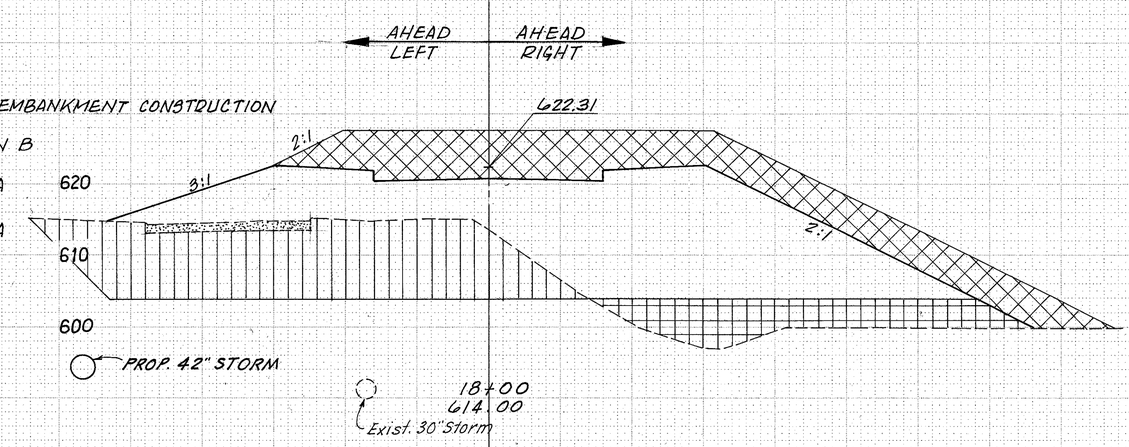

SEEDING LIN. FT.	SEEDING SQ. YDS		TEMPORARY SEEDING LIN. FT.	TEMPORARY SEEDING SQ. YDS.		END AREA CUT	END AREA FILL	CU. YDS. CUT	CU. YDS. FILL	
83		RIGHT	102	RIGHT	ITEMS A&B	(RIGHT)	0	1004			
66		LEFT	31	LEFT	ITEM C	(RIGHT)		509			
					ITEMS D&E	(RIGHT)	0	388			
					ITEMS A&B	(LEFT)	0	604			
					ITEM C	(LEFT)		165			
					ITEMS D&E	(LEFT)	542	0			
									0	2727	ITEMS A&B (RT.)
										1478	ITEM C (RT.)
									105	929	ITEMS D&E (RT.)
									0	1060	ITEMS A&B (LT.)
										375	ITEM C (LT.)
									1333	0	ITEMS D&E (LT.)
545		RIGHT		RIGHT							
572		LEFT		LEFT							
			882								
			214								
75		AHEAD (RIGHT)	94		ITEMS A&B	(AHEAD, RIGHT)	0	814			
61		AHEAD (LEFT)	31		ITEM C	(AHEAD, RIGHT)		476			
141		BACK	125		ITEMS D&E	(AHEAD, RIGHT)	70	231			
					ITEMS A&B	(AHEAD, LEFT)	0	319			
					ITEM C	(AHEAD, LEFT)		162			
					ITEMS D&E	(AHEAD, LEFT)	619	0			
					ITEMS A&B	(BACK)	0	537			
					ITEM C	(BACK)		638			
					ITEMS D&E	(BACK)	691	231			
795			706						0	1525	ITEMS A&B
										1179	ITEM C
									1511	445	ITEMS D&E

U.S. 20 OVER GRAND RIVER

U.S. 20 CROSS SECTIONS STA. 18+00 TO STA. 18+81 (22)

BRUNING 37772
PLATE 3 CROSS SECTION - DOTTED
CHARLES BRUNING COMPANY
MADE IN U.S.A.

F.H.W.A. REGION	STATE	PROJECT	
5	OHIO		

23
86

LAKE COUNTY
LAK-20-17.14

SUB-SUMMARIES

SEEDING	2338 SQ. YDS.
EXCAVATION	2402 CU. YDS.
EMBANKMENT	226 CU. YDS.

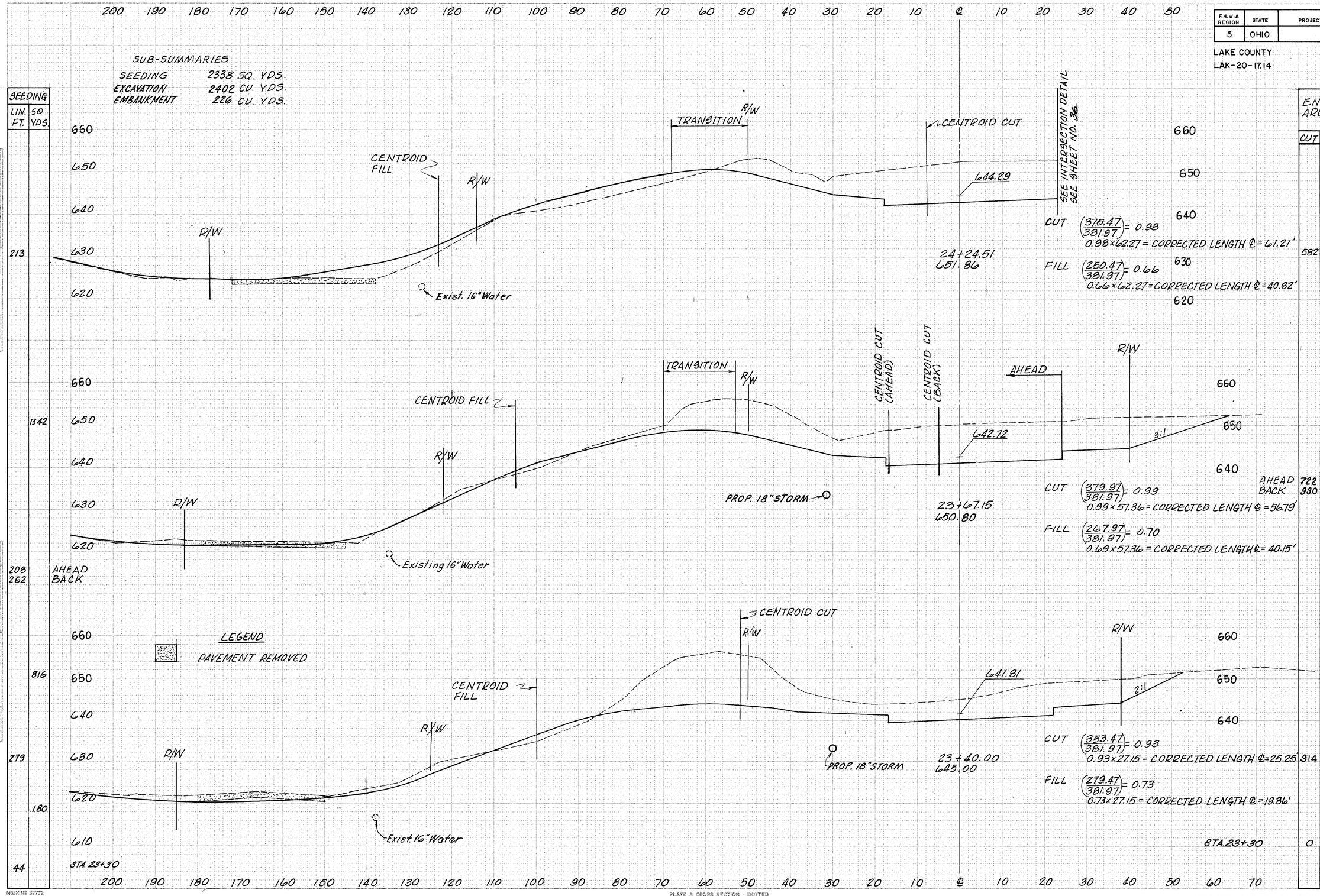

U.S. 20 OVER GRAND RIVER

U.S. 20 CROSS SECTIONS STA. 23+40.00 TO STA. 24+24.51

23

BRUNING 37772
PLATE 3 CROSS SECTION - DOTTED
CHARLES BRUNING COMPANY
MADE IN U.S.A.

F.H.W.A. REGION	STATE	PROJECT	
5	OHIO		

24
86

LAKE COUNTY
LAK-20-17.14

SUB-SUMMARIES
SEEDING 4059 SQ. YDS.
EXCAVATION 2723 CU. YDS.
EMBANKMENT 1713 CU. YDS.

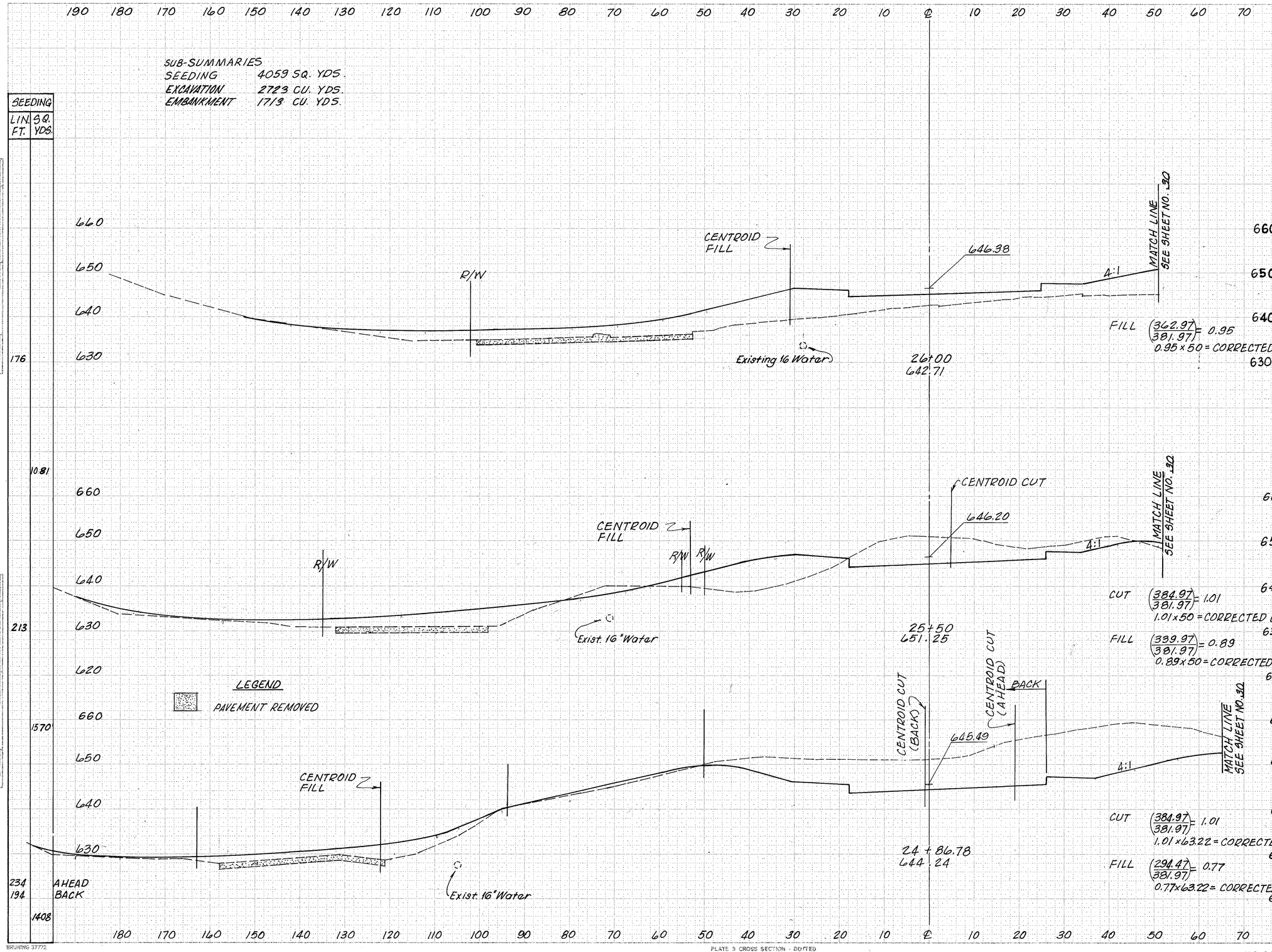

SEEDING LIN. FT.	SEEDING SQ. YDS.
176	
10.81	
213	
1570	
234	
194	
1408	

END AREA CUT	END AREA FILL	CU. YDS. CUT	CU. YDS. FILL
0	635		
		240	855
258	403		
		1280	541
AHEAD 827	196		
BACK 479	196		
		1203	317
582	223		

U.S. 20 OVER GRAND RIVER

U.S. 20 CROSS SECTIONS STA. 24+86.78 TO STA. 26+00

24

BRUNING 37772

PLATE 3 CROSS SECTION - DOTTED
CHARLES BRUNING COMPANY
MADE IN U.S.A.

F.H.W.A. REGION	STATE	PROJECT	
5	OHIO		

25
86

LAKE COUNTY
LAK-20-17.14

SUB-SUMMARIES

SEEDING 1851 SQ. YDS.
EMBANKMENT 2485 CU. YDS

SEEDING LIN. FT.	SEEDING SQ. YDS.
0	
	0
0	
	0
0	
239	
86	
681	
159	
931	

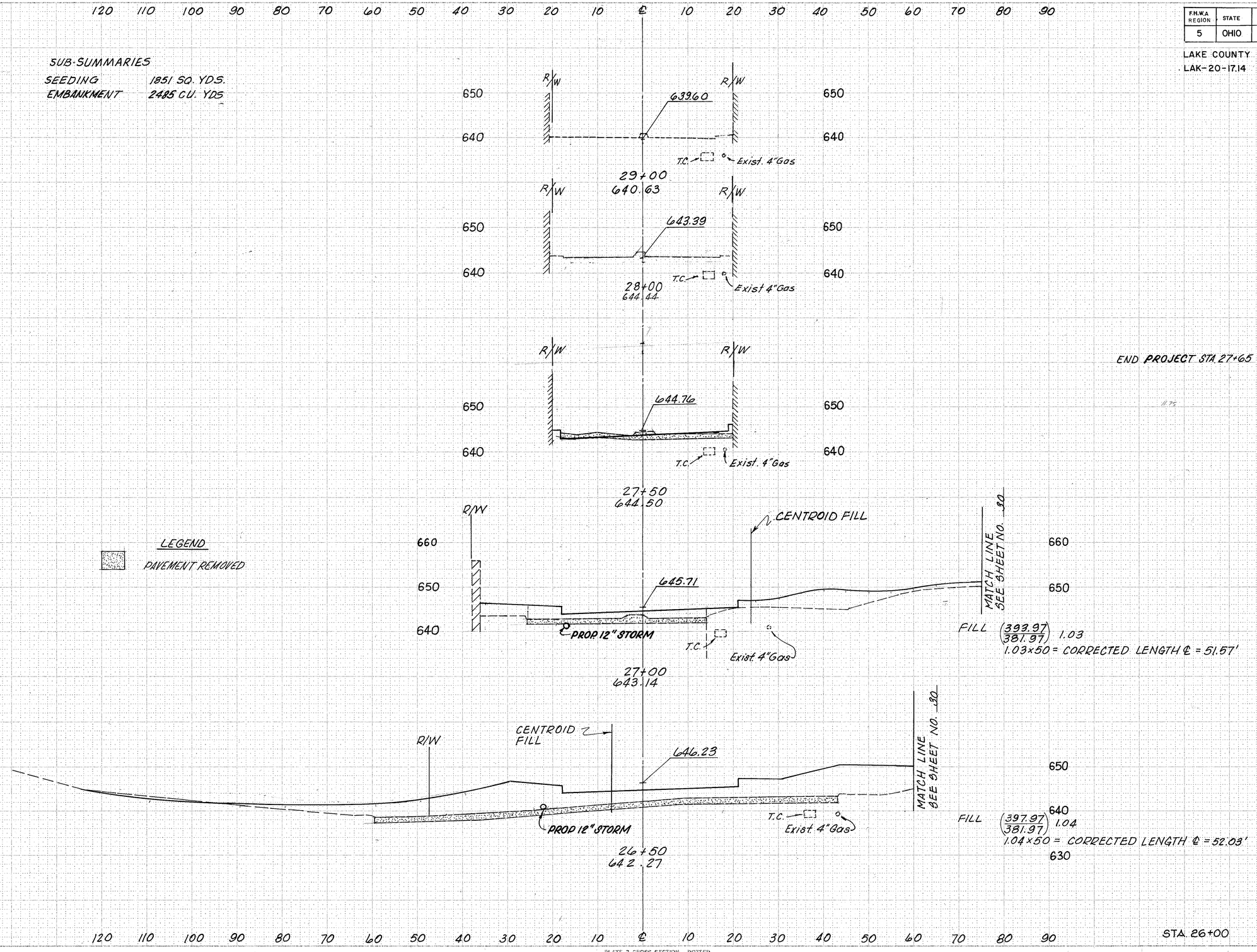

	END AREA CUT	END AREA FILL	CU. YDS. CUT	CU. YDS. FILL
END PROJECT STA. 27+65	0	0		
	0	35	AH BK	
			0	19
	0	35		
			0	285
	0	263		
			0	889
	0	700		
			0	1292
STA. 26+00	0	635		

U.S. 20 OVER GRAND RIVER

U.S. 20 CROSS SECTIONS STA. 26+50 TO STA. 29+00

25

BRUNING 37772
PLATE 3 CROSS SECTION - DOTTED
CHARLES BRUNING COMPANY
MADE IN U.S.A.

FHWA REGION	STATE	PROJECT	
5	OHIO		

LAKE COUNTY
LAK-20-17.14

26
86

SUB - SUMMARIES

SEEDING	108 SQ. YDS.
CUT	293 CU. YDS.
FILL	0 CU. YDS.

SEEDING	
LIN. FT.	SQ. YDS.
71	
	108
96	

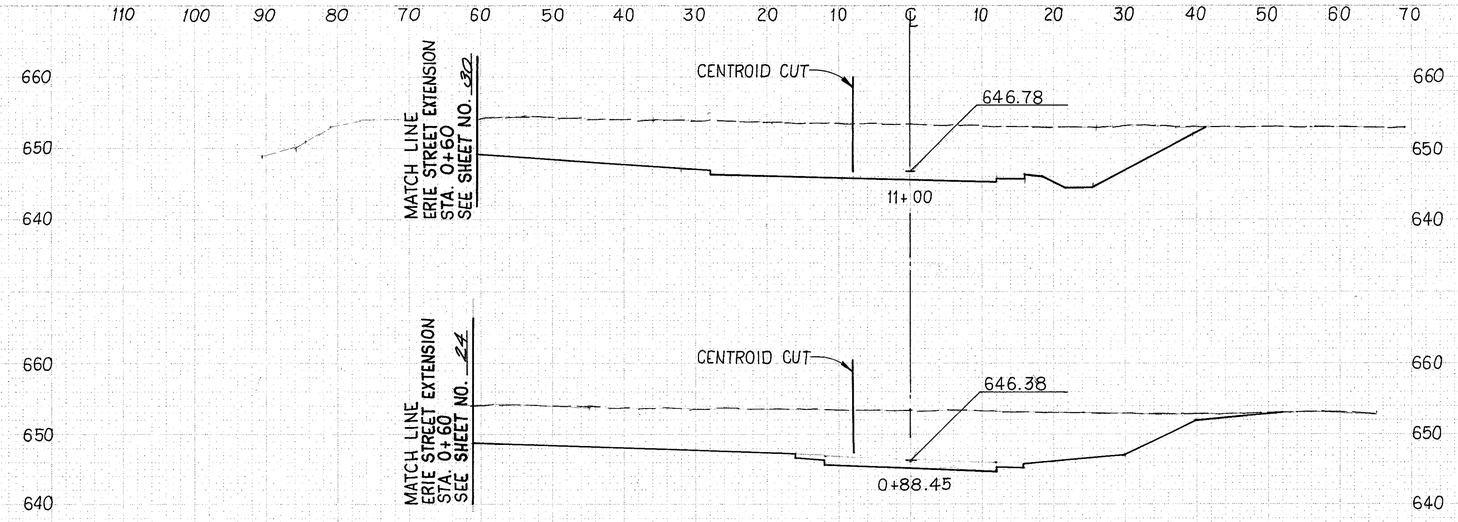

CUT $\frac{448.69}{440.69} = 1.02$

1.02 (11.55) = 11.78 CORRECTED ℄ LENGTH

FILL NO CORRECTION

END AREA		CU YDS.	
CUT	FILL	CUT	FILL
682	0		
		293	0
660	0		

U.S. 20 OVER GRAND RIVER

CASEMENT AVE. CROSS SECTIONS STA. 0+88 45 TO STA. 11+00

26

F.H.W.A REGION	STATE	PROJECT	
5	OHIO		

LAKE COUNTY
LAK-20-17.14

27
86

SUB-SUMMARIES
SEEDING 2402 SQ. YDS.
CUT 2640 CU. YDS.
FILL 120 CU. YDS.

SEEDING LIN. FT.	SEEDING SQ. YDS.	END AREA CUT	END AREA FILL	CU. YDS. CUT	CU. YDS. FILL
	362			194	15
69		110	16		
	414			279	14
80		191	0		
320				468	0
115		304	0		
	714			678	38
142		421	57		
	592			1021	53

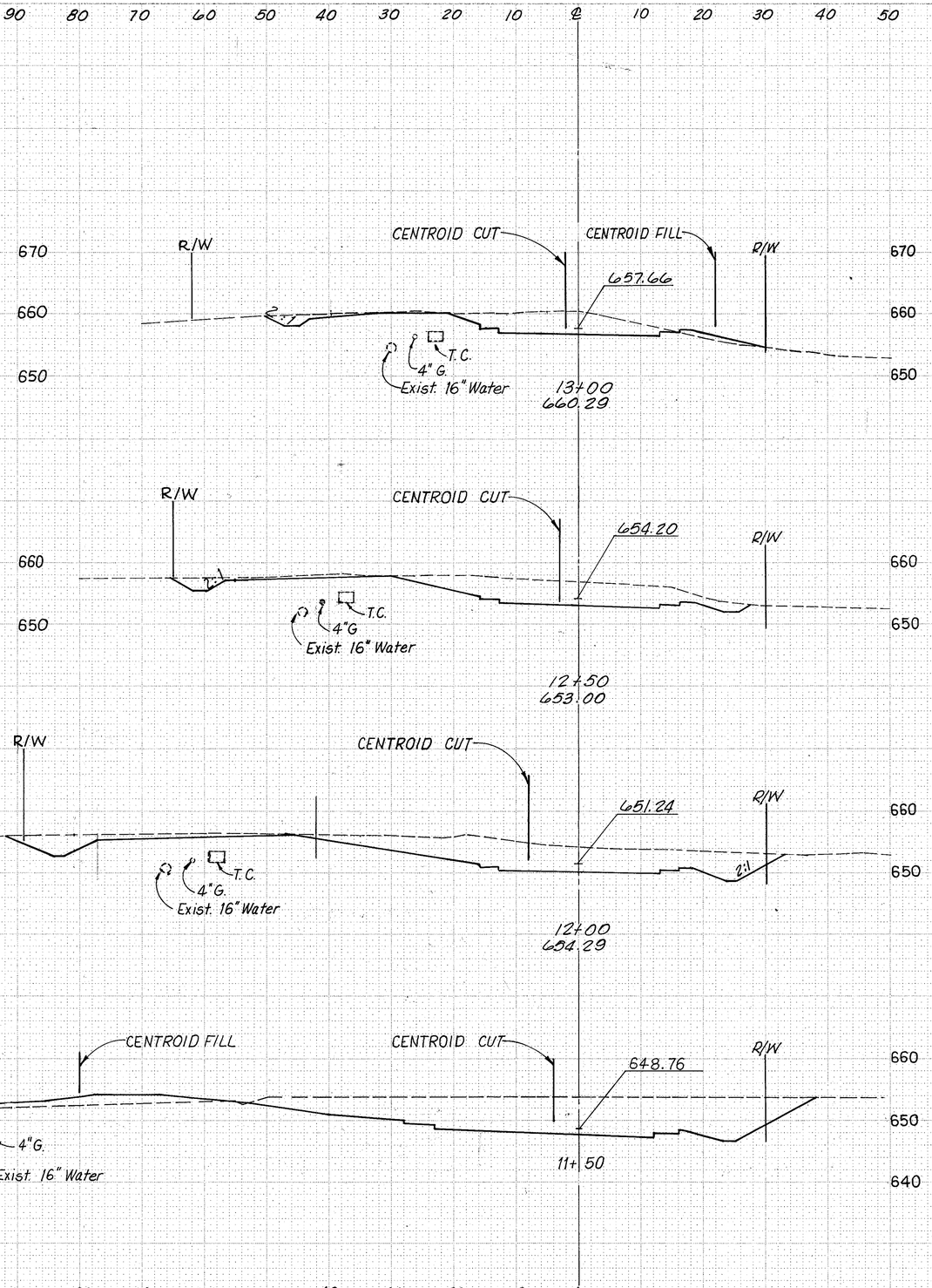

NO CORRECTION

CUT $\frac{418.69}{440.69} = 0.95$
0.95(50) = 47.5 CORRECTED ℄ LENGTH
FILL NO CORRECTION

CUT $\frac{450.19}{440.69} = 1.02$
1.02(50) = 51 CORRECTED ℄ LENGTH
FILL NO CORRECTION

CUT $\frac{446.69}{440.69} = 1.01$
1.01(50) = 50.5 CORRECTED ℄ LENGTH
FILL $\frac{528.69}{440} = 1.20$
1.2 (30) = 36 CORRECTED ℄ LENGTH

NO CORRECTION

U.S. 20 OVER GRAND RIVER

CASEMENT AVENUE CROSS SECTIONS STA. 11+50 TO STA. 13+00

27

BRUNING 37772
PLATE 3 CROSS SECTION - DOTTED
CHARLES BRUNING COMPANY
MADE IN U.S.A.

F.H.W.A. REGION	STATE	PROJECT	
5	OHIO		

28
86

LAKE COUNTY
LAK-20-17.14

SUB-SUMMARIES
SEEDING 777 SQ. YDS
CUT 350 CU. YDS
FILL 0 CU. YDS.

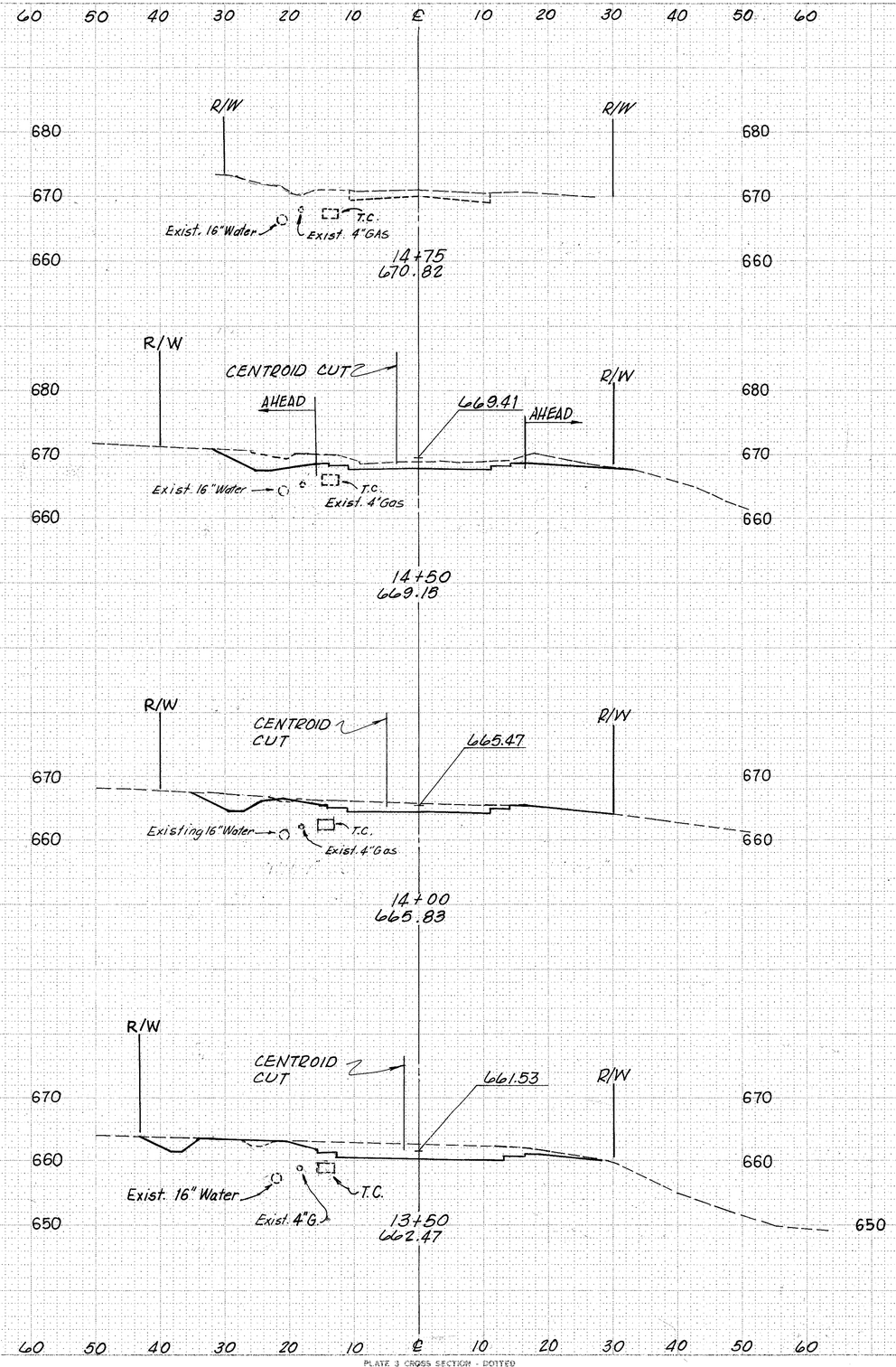

SEEDING LIN. FT.	SEEDING SQ. YDS.		END AREA CUT	END AREA FILL	CU YDS. CUT	CU YDS. FILL
40			0	0		
	132	NO CORRECTION			84	0
55			91	0		
	314	NO CORRECTION			129	0
58			70	0		
	331	NO CORRECTION			137	0
61			100	0		

U.S. 20 OVER GRAND RIVER

BRUNNING 59772

PLATE 3 CROSS SECTION - DOTTED
CERTIFIED BRUNNING COMPANY
MADE IN U.S.A.

CASEMENT AVENUE CROSS SECTIONS STA. 13+50 TO STA. 14+75 (28)

BENCH MARK
Cut on Southeast Wing Wall @ Railroad Underpass, Elev. = 650.23

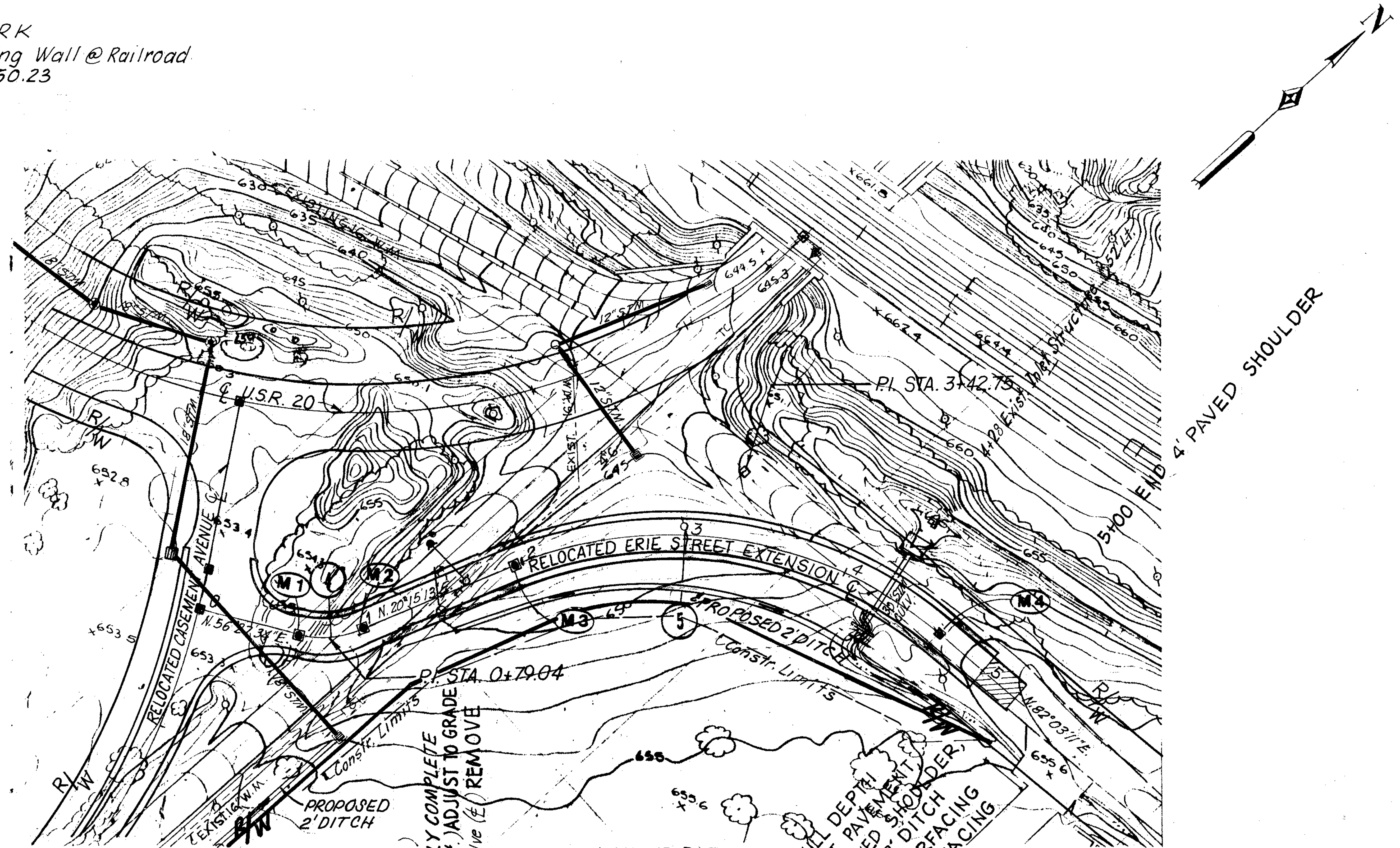

℄ CURVE DATA (4)
Δ = 36° 12' 21"
R = 60.00'
L = 37.91'
T = 19.61'
C = 37.29'

0+73 OBT. M.H. (42' Rt.)
1+10 HYDRANT ASSEMBLY COMPLETE
1+48 Existing M.H. (9' Rt.) ADJUST TO GRADE
1+69 Existing Hyd. & Valve (℄) REMOVE
1+50 BEGIN 2' DITCH

℄ CURVE DATA (5)
Δ = 61° 47' 58"
R = 250.00'
L = 269.65'
T = 149.62'
C = 256.77'

5+00 END FULL DEPTH ASPHALT PAVEMENT, END 4' PAVED SHOULDER, AND END 2' DITCH
5+00 BEGIN RESURFACING
5+25 END RESURFACING

MONUMENTS

REF. NO.	SIDE	STATION FROM	STATION TO	604 MONUMENT ASSEMBLY
M1	℄ P.C.	0+59.43		1
M2	℄ P.T.	0+97.34		1
M3	℄ P.C.	1+93.13		1
M4	℄ P.T.	4+62.78		1
			TOTAL	4

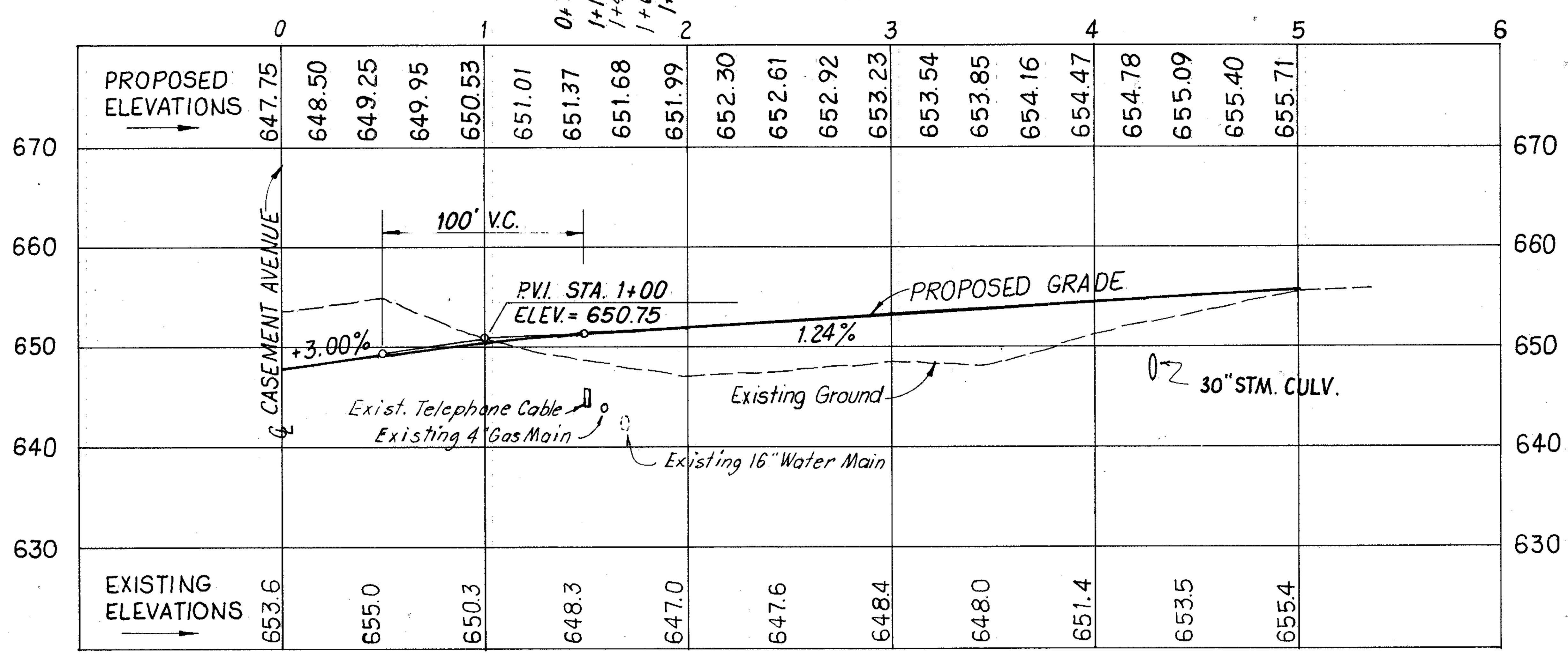

HORIZONTAL 50 0 50 100 150 200
VERTICAL 10 0 10 20 30
SCALE IN FEET

SCALE 1" = 50'
MADE CER. DATE 9/85
TRCD. MAG. DATE 9/85
CKD. ____ DATE ____

WOODRUFF, INC.
CONSULTING ENGINEERS
CLEVELAND OHIO

REFERENCES:

Cross Sections	Sh. No. 30 & 31
Culvert	Sh. No. 40
Waterwork	Sh. No. 70 to 81
Intersection Detail	Sh. No. 36

Grading Plan, Waterwork — Sheet No. 38

F.H.W.A. REGION	STATE	PROJECT	
5	OHIO		

30
86

LAKE COUNTY
LAK-20-17.14

SUB-SUMMARIES
SEEDING 2249 SQ. YDS.
CUT 642 CU. YDS.
FILL 2260 CU. YDS.

SEEDING LIN. FT.	SEEDING SQ. YDS.
	392
63	
	339
59	
	323
57	
	342
66	
	442
93	
	411
92	

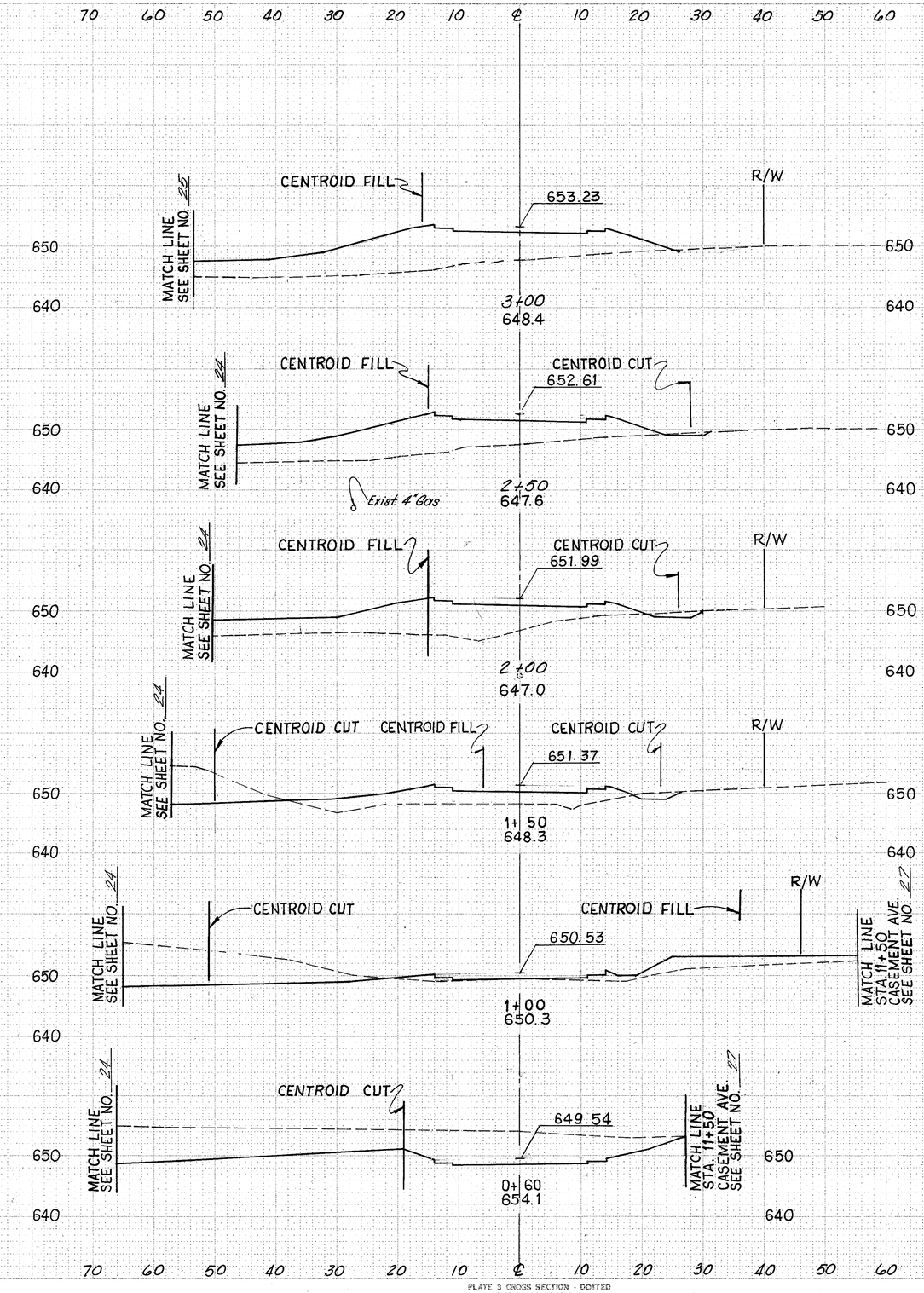

CUT $\frac{215}{250} = 0.86$
0.86 (50) = 43 CORRECTED FOR ℄ LENGTH
FILL $\frac{262}{250} = 1.048$
1.048 (50) = 52.4 CORRECTED FOR ℄ LENGTH

CUT NO CORRECTION
FILL $\frac{265.5}{250} = 1.062$
1.062 (50) = 53.1 CORRECTED FOR ℄ LENGTH

CUT $\frac{223}{250} = 0.892$
0.892 (50) = 44.6 CORRECTED FOR ℄ LENGTH

NO CORRECTION

NO CORRECTION

CUT $\frac{39.5}{65} = 0.607$
0.607 (40) = 24.3 CORRECTED FOR ℄ LENGTH
FILL $\frac{111}{65} = 1.71$
1.71 (40) = 68.4' CORRECTED FOR ℄ LENGTH

END AREA CUT	END AREA FILL	CU. YDS. CUT	CU. YDS. FILL
		37	537
0	332		
		1	599
1	278		
		8	498
8	260		
		75	352
81	120		
		246	180
185	74		
		275	94
425	0		

U.S. 20 OVER GRAND RIVER

ERIE ST. EXTENSION CROSS SECTIONS STA. 1+15.57 TO STA. 3+00

30

PLATE 3 CROSS SECTION - DOTTED
CHARLES BRUNNING COMPANY
MADE IN U.S.A.
BRUNNING 37772

F.H.W.A REGION	STATE	PROJECT	
5	OHIO		

31
86

LAKE COUNTY
LAK-20-17.14

SUB-SUMMARIES
SEEDING 1395 SQ. YDS.
CUT 417 CU. YDS.
FILL 722 CU. YDS.

5+25 CUT OR FILL = 0

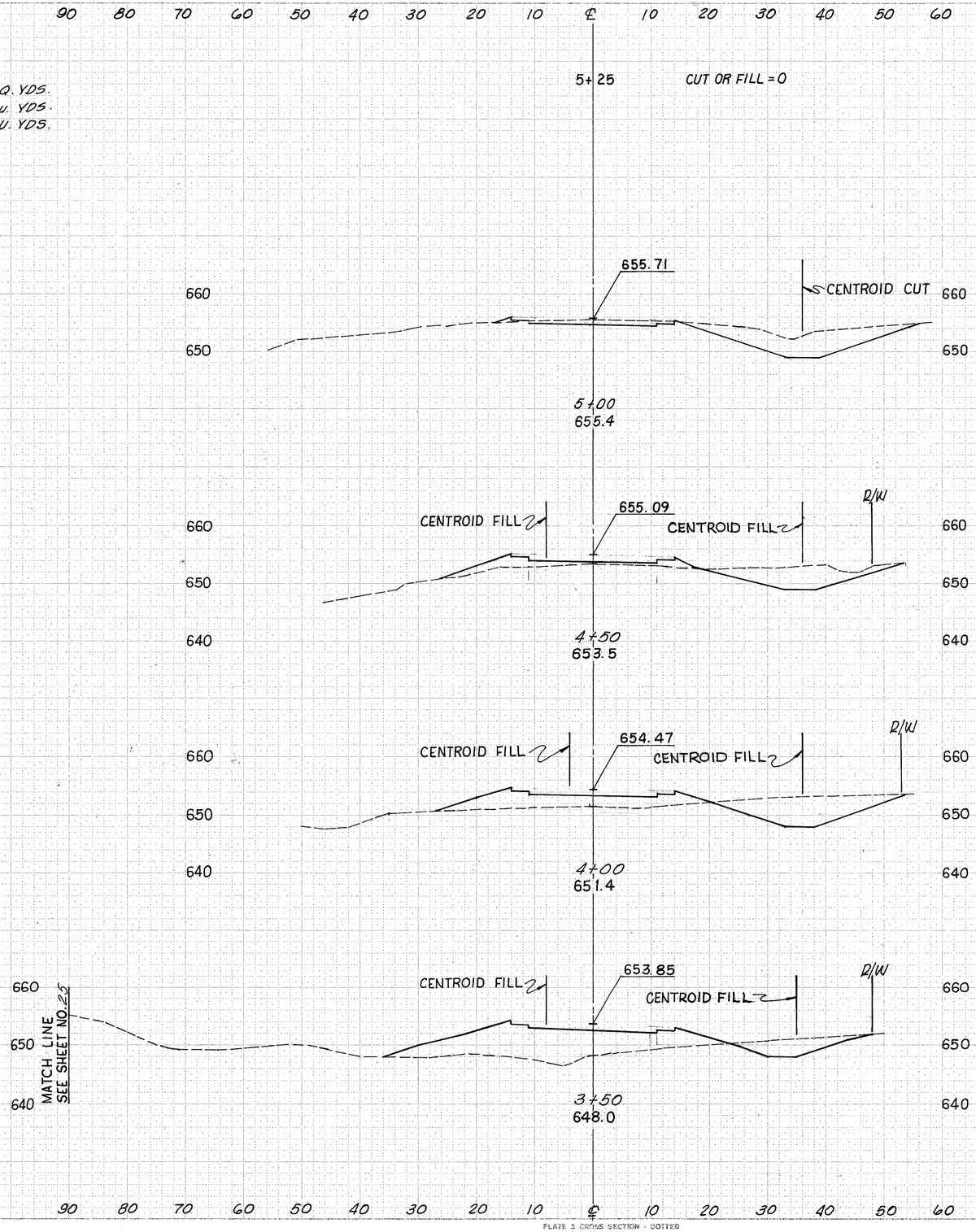

SEEDING LIN. FT.	SEEDING SQ. YDS.		END AREA CUT	END AREA FILL	CU. YDS. CUT	CU. YDS. FILL	
40		(5+25)	0	0			
	152				54	1	NO. CORRECTION
69			117	2			
	398				180	44	NO CORRECTION
74			77	45			
	417				145	133	CUT $\frac{214}{250} = 0.856$ 0.856 (50) = 42.8' CORRECTED FOR ℄ LENGTH FILL $\frac{256}{250} = 1.024$ 1.024(50) = 51.2 CORRECTED FOR ℄ LENGTH
76			105	95			
	428				38	544	CUT $\frac{215}{250} = 0.86$ 0.86(50) = 43' CORRECTED FOR ℄ LENGTH FILL $\frac{262}{250} = 1.048$ 1.048(50) = 52.4' CORRECTED FOR ℄ LENGTH
78			47	221			

FINAL SURVEY: SURVEYED, PLOTTED, NOTE BOOK, AREAS, AREAS CHECKED, NO.

ORIGINAL SURVEY: CORRECTED, PLOTTED, NOTE BOOK, AREAS, AREAS CHECKED, NO.

BY DATE

BRUNING 37772

PLATE 3 CROSS SECTION - DOTTED
CHARLES BRUNING COMPANY
MADE IN U.S.A.

ERIE ST. EXTENSION CROSS SECTIONS STA. 3+00 TO STA. 4+95

U.S. 20 OVER GRAND RIVER

DRIVE DETAIL

F.A.P.S.A. REGION	STATE	PROJECT	
5	OHIO		

32 / 86

LAKE COUNTY

LAK-20-17.14

BENCH MARK
Top of Hydrant @ Corner of Fobes Street & U.S. 20, Elev. 655.46

SCALE IN FEET: 20 0 20 40 60 80

QUANTITY CALCULATIONS
BY C.E.R. DATE Sept. 1985
CHKD. I.M. DATE Sept. 1985
WOODRUFF, INC.

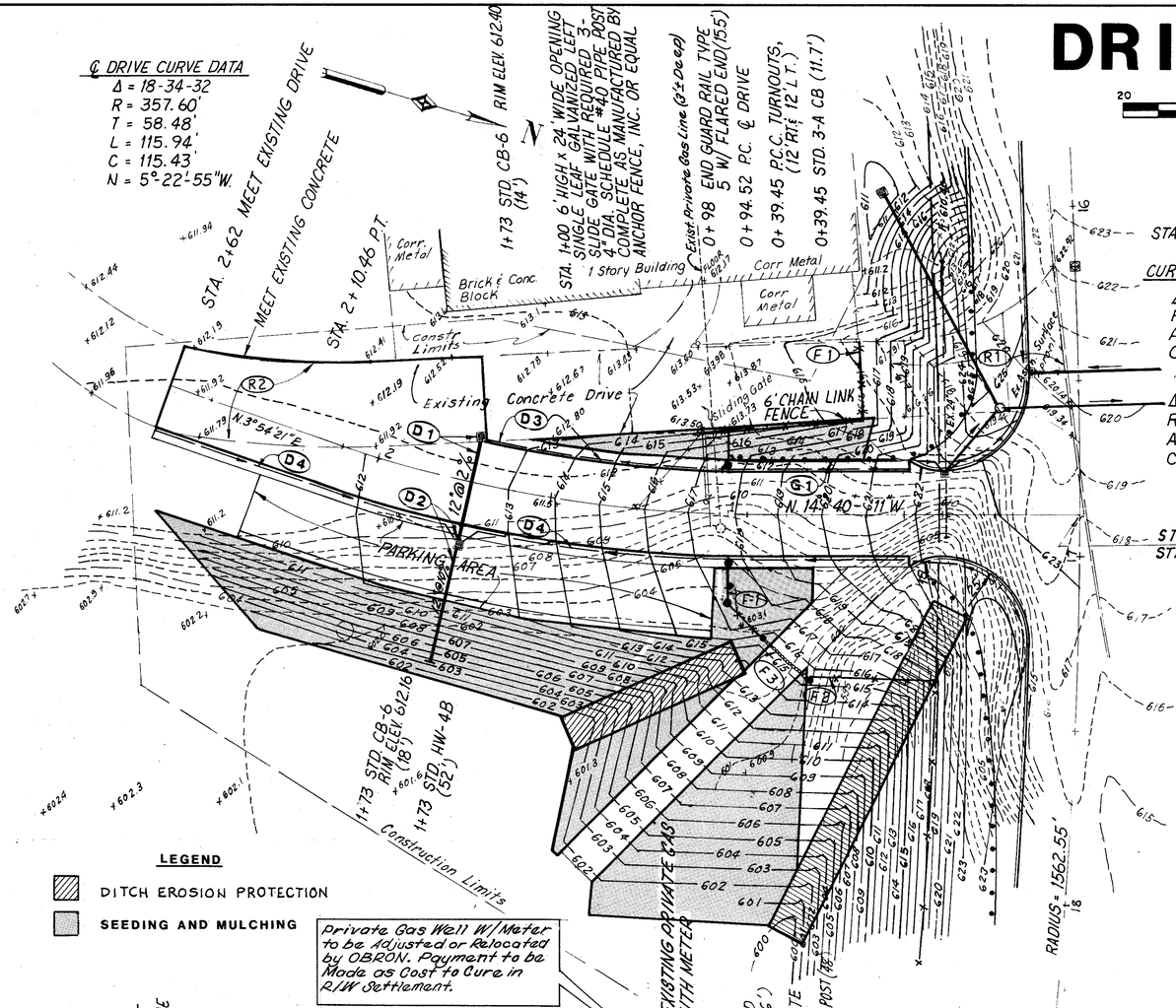

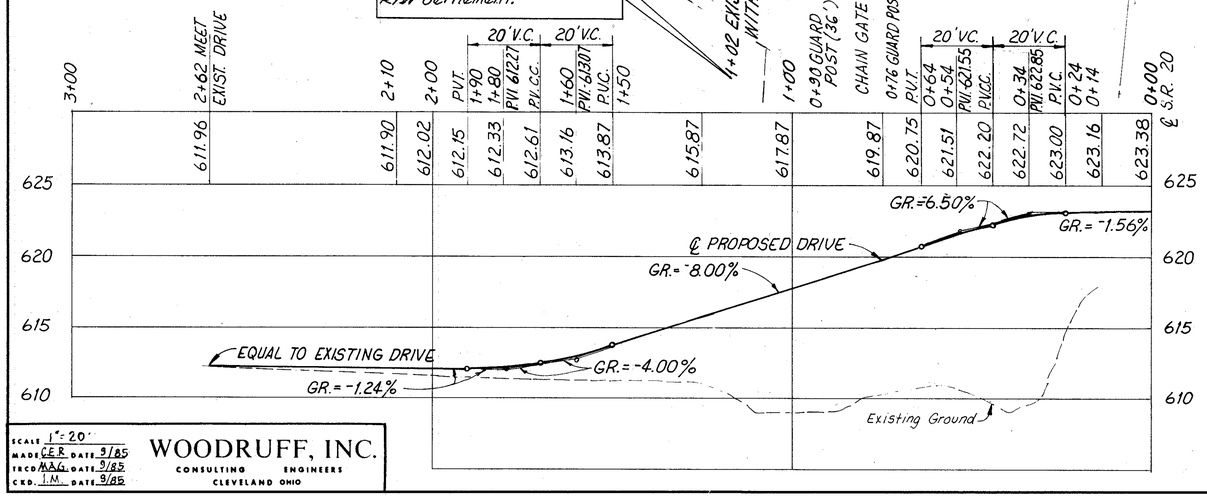

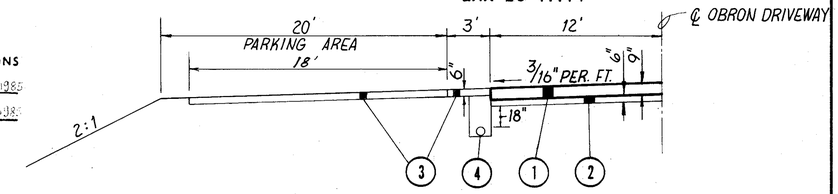

DRIVE TYPICAL SECTIONS

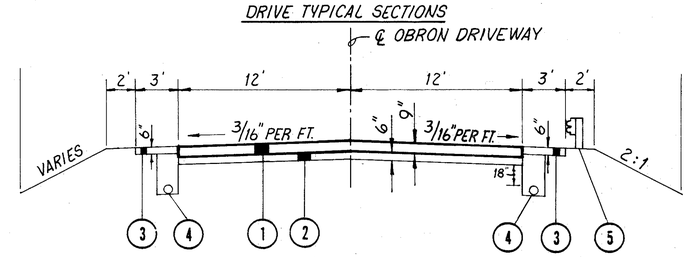

LEGEND

REF. NO.	ITEM NO.	DESCRIPTION
1	451	9" REINFORCED PORTLAND CEMENT CONCRETE PAVEMENT
2	310	SUBBASE TYPE II
3	408	BITUMINOUS PRIME COAT
	409	SEAL COAT BITUMINOUS MATERIAL
	409	SEAL COAT COVER AGGREGATE NO. 8
	411	STABILIZED CRUSHED AGGREGATE
4	605	6" UNCLASSIFIED PIPE UNDERDRAINS
5	606	GUARD RAIL, TYPE 4

DRIVEWAY

REF. NO.	SIDE	STATION FROM	STATION TO	202 PAVEMENT REMOVED SQ. YDS.	602 CONCRETE MASONRY CU. YDS.	603 12" CONDUIT TYPE B LIN. FT.	603 6" CONDUIT TYPE F LIN. FT.	604 STD. NO. 1 MANHOLE AS PER PLAN EACH	604 STD. NO. 6 C.B. EACH	605 UNCLASSIFIED 6" PIPE UNDER-DRAINS LIN. FT.	606 GUARD RAIL, TYPE 4 LIN. FT.	607 FENCE TYPE CL, AS PER PLAN LIN. FT.	607 GATE, AS PER PLAN LIN. FT.	606 GUARD POST, AS PER PLAN EACH
G 1	RT.	0+53	1+03								43.75			
D 1	RT.-LT.	1+73				32			1					
D 2	LT.	1+73			0.2	34			1					
D 3	RT.	0+40	1+65				10			120				
D 4	LT.						20			220				
F 1	RT.	0+61	1+00										1	
F 2	LT.	0+40	1+00									36		
F 3	LT.	0+83												2
R 1	RT.	0+19	0+61	104										
R 2	RT.-LT.	1+72	2+62	240										
F-4	LT.	17+37	20+00									263		
		TOTAL		344	0.2	66	30		2	340	43.75	299	1	2

SCALE 1" = 20'
MADE CER DATE 9/85
TRCD MAG DATE 9/85
CKD. I.M. DATE 9/85

WOODRUFF, INC.
CONSULTING ENGINEERS
CLEVELAND OHIO

U.S. 20 OVER GRAND RIVER

ITEM 606 GUARD POST, AS PER PLAN

Provisions of item 606 will govern the Installation of this item except that a 30 feet length of 1/4" dia. security chain shall be installed between the two posts erected 26 feet apart. One end of the chain shall be secured to the post with an 1/4" dia. eyebolt. The chain shall end in a heavy duty hook for secure fastening.

ITEM 607, GATE, AS PER PLAN

Gate for this item shall be a six (6) feet high chain link fence type single 24 feet left opening aluminum frame cantilever slide gate, supported by three (3) 4" diameter schedule #40 galvanized steel posts as manufactured by the Anchor Fence, Inc. or approved equal.

Gate posts shall be set in a 24" dia. 6'-0" deep concrete foundation. Construction of this item will be according to the applicable provisions of item 607 and standard Construction drawing F-1 (11-10-83).

ITEM 607 FENCE, TYPE CL, AS PER PLAN

All provisions of item 607 will apply except the fence fabric which shall be a 72-inch chain link fence fabric with top rail with six feet line posts embeded in four (4) feet of concrete.

Payment for this item will be made for item 607 fence, type CL, as per plan, and shall include all labor, materials and incidentals necessary to complete this item.

DRIVE
QUANTITITIES

ITEM NO	DESCRIPTION	UNIT	TOTAL QUANTITITY
203	EMBANKMENT	CU. YDS.	3,481
310	SUBBASE TYPE II	CU. YDS.	146
408	BITUMINOUS PRIME COAT	GALS.	165
409	SEAL COAT BITUMINOUS MATERIAL	GALS.	124
409	SEAL COAT COVER AGGREGATE NO. 8	CU. YDS.	4
411	STABILIZED CRUSHED AGGREGATE	CU. YDS.	69
451	9" REINFORCED CONCRETE PAVEMENT	SQ YDS.	796

ITEM 203 EARTHWORK & EROSION CONTROL SUB-SUMMARIES

STATION		659 AGRICULTURAL LIMING	659 COMMERCIAL FERTILIZER	659 SEEDING AND MULCHING	670 DITCH EROSION PROTECTION	
		TONS	TONS	SQ. YDS.	SQ. YDS.	
		0.45	0.09	820	189	
	TOTAL	0.45	0.09	820	189	

SCALE
MADE E.R. DATE 3/85
TRCD. M.A.A. DATE 3/85
CKD. I.M. DATE 3/85

WOODRUFF, INC.
CONSULTING ENGINEERS
CLEVELAND OHIO

F.H.W.A. REGION	STATE	PROJECT	
5	OHIO		

LAKE COUNTY
LAK-20-17.14

34
86

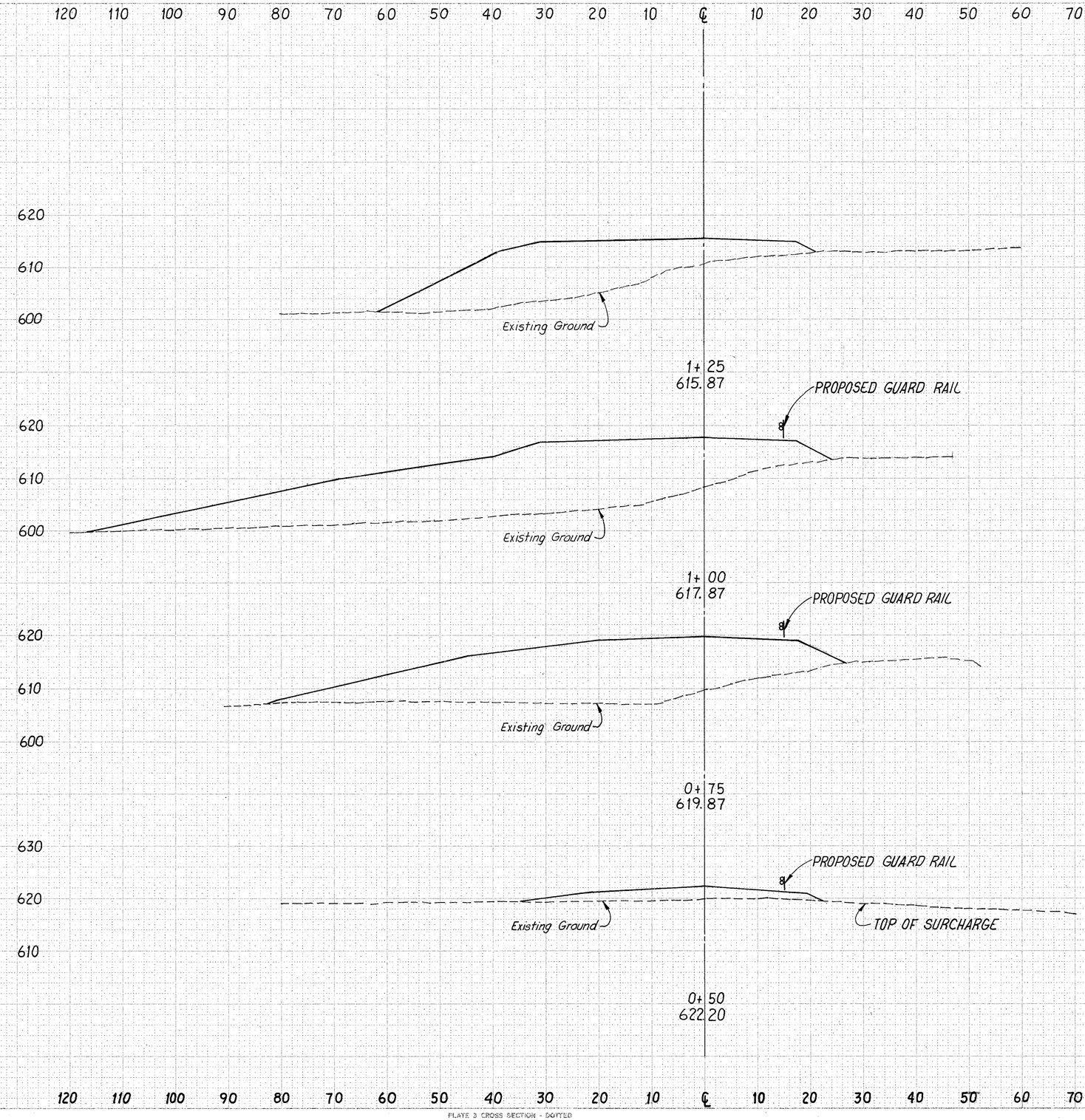

	END AREA		CU. YDS.	
	CUT	FILL	CUT	FILL
1+25	0	564		
			0	786
1+00	0	1,133		
			0	903
0+75	0	817		
			0	423
0+50	0	97		

U.S.20 OVER GRAND RIVER

DRIVEWAY CROSS SECTIONS (34)

BRUNING 37772
PLATE 3 CROSS SECTION - DOTTED
CHARLES BRUNING COMPANY
MADE IN U.S.A.

F.H.W.A. REGION	STATE	PROJECT	
5	OHIO		

35
86

LAKE COUNTY
LAK-20-17.14

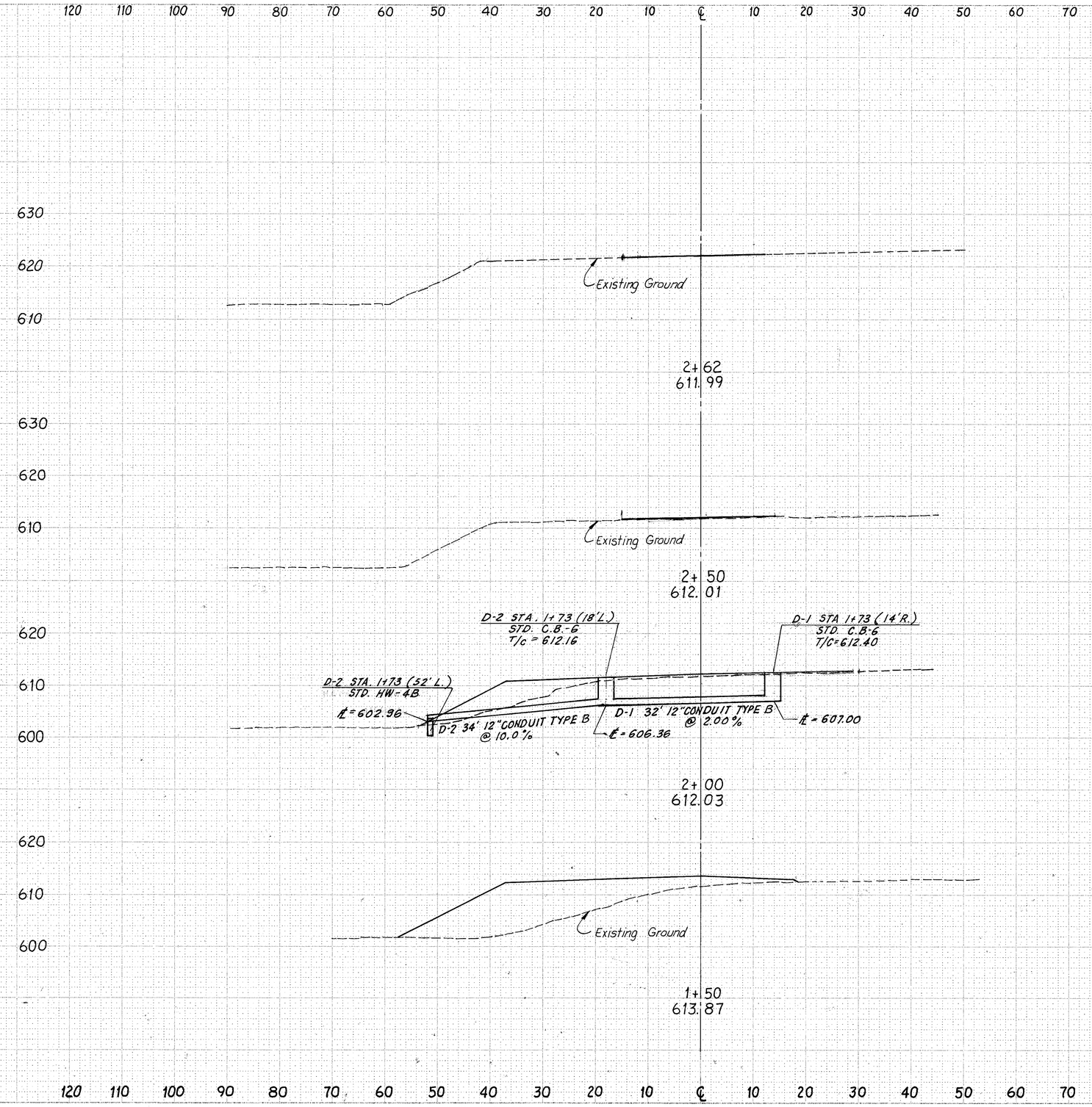

END AREA CUT	END AREA FILL	CU. YDS. CUT	CU. YDS. FILL
0	0		
		0	1
0	4		
		0	113
0	118		
		0	421
0	337		
		0	834

U.S. 20 OVER GRAND RIVER

DRIVEWAY CROSS SECTIONS

35

PLATE 3 CROSS SECTION - DOTTED
CHARLES BRUNING COMPANY
MADE IN U.S.A.

BRUNING 37772

INTERSECTION DETAILS

QUANTITY CALCULATIONS
BY C.E.R. DATE 9-85
CHKD. I.M. DATE 9-85
WOODRUFF, INC.

F.H.W.A. REGION	STATE	PROJECT	
5	OHIO		

LAKE COUNTY
LAK-20-17.14

36
86

(1)
Δ = 78°54'47"
R = 60.00'
L = 82.64'
T = 49.38'
C = 76.26'

(2)
Δ = 80°39'36"
R = 50.00'
L = 70.39'
T = 42.45'
C = 64.72'

(3)
Δ = 78°27'40"
R = 35.00'
L = 47.93'
T = 28.58'
C = 44.27'

(4)
Δ = 44°32'01"
R = 50.00'
L = 38.86'
T = 20.47'
C = 37.89'

(5)
Δ = 83°08'42"
R = 50.00'
L = 72.56'
T = 44.35'
C = 66.36'

LEGEND

(C) STANDARD CONTRACTION JOINT
(LT) STANDARD LONGITUDINAL JOINT
(TE) THICKENED EDGE JOINT (SEE DETAIL)
(E) EXPANSION JOINT WITHOUT DOWELS
(L) LONGITUDINAL JOINT WITHOUT TIEBARS

NOTE:
FOR JOINT DETAILS SEE SHEET NO. 37

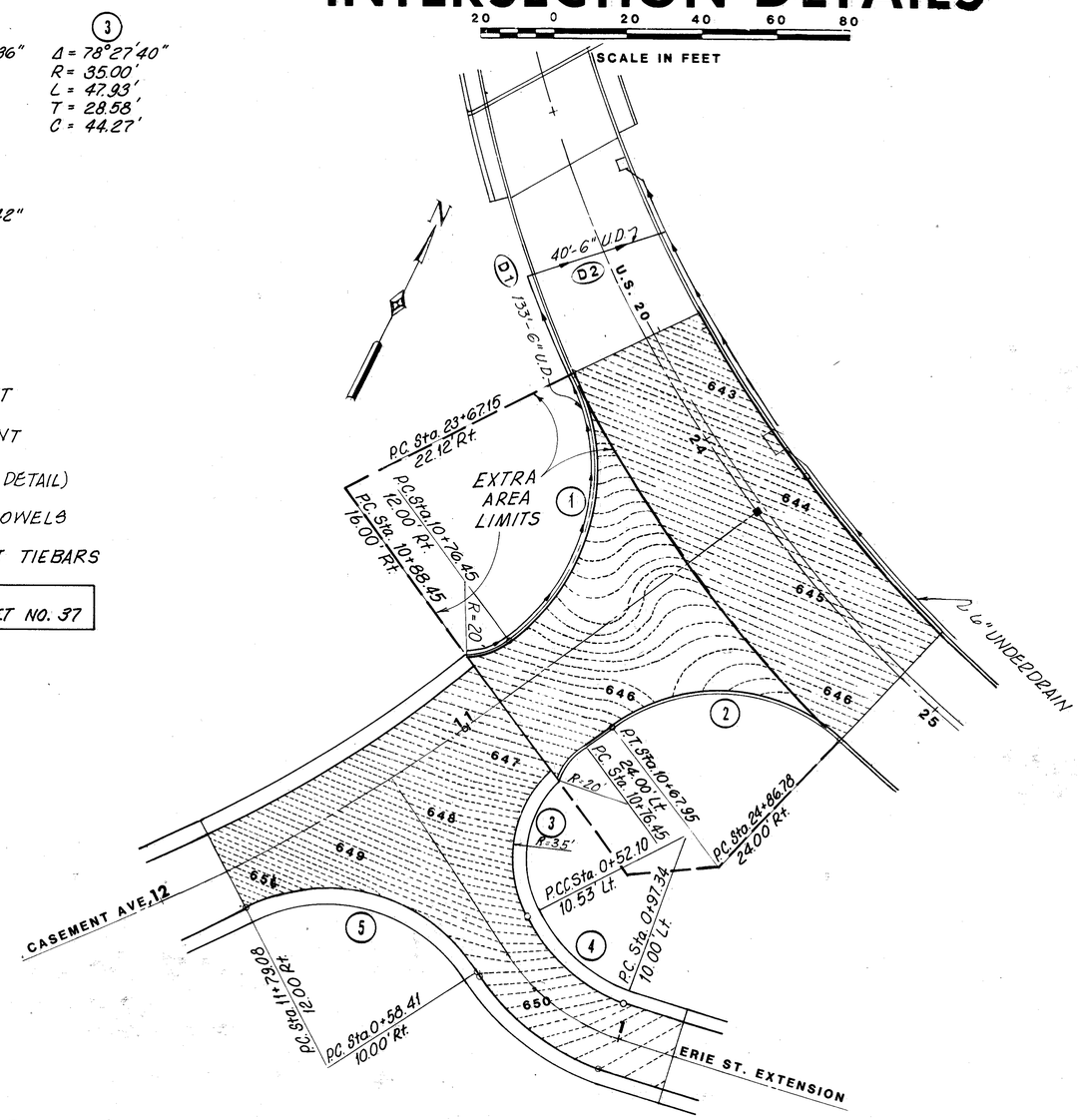

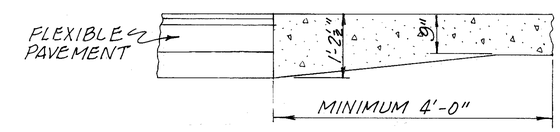

THICKENED EDGE JOINT

1 0 1 2 3 4
SCALE IN FEET

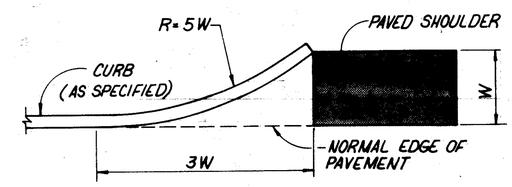

STANDARD CURB TURN-OUT DETAIL
NO SCALE

				605 6" Unclassified Pipe U.D.	605 6" Shallow Pipe U.D. 707.01 Type III, 707.21 Type III	
				Lin. Ft.	Lin. Ft.	
D-1	Rt.	23+30	10+88	133		
D-2	℄	23+32			40	
	Total:			133	40	

NOTE:
THE FOLLOWING QUANTITIES HAVE BEEN ESTIMATED FOR THE EXTRA AREA LIMITS:
EXCAVATION NOT INCLUDING EMBANKMENT CONSTRUCTION = 2350 CU. YDS.
SEEDING & MULCHING = 592 SQ. YDS.

Note:
Quantities are carried to the Sub-summaries on Sheet No. 12.

SCALE 1" = 20'
MADE CER DATE 9/85
TRCD MAG DATE 9/85
CKD. I.M. DATE 9/85

WOODRUFF, INC.
CONSULTING ENGINEERS
CLEVELAND OHIO

U.S.20 OVER GRAND RIVER

F.H.W.A. REGION	STATE	PROJECT	
5	OHIO		

LAKE COUNTY
LAK-20-17.14

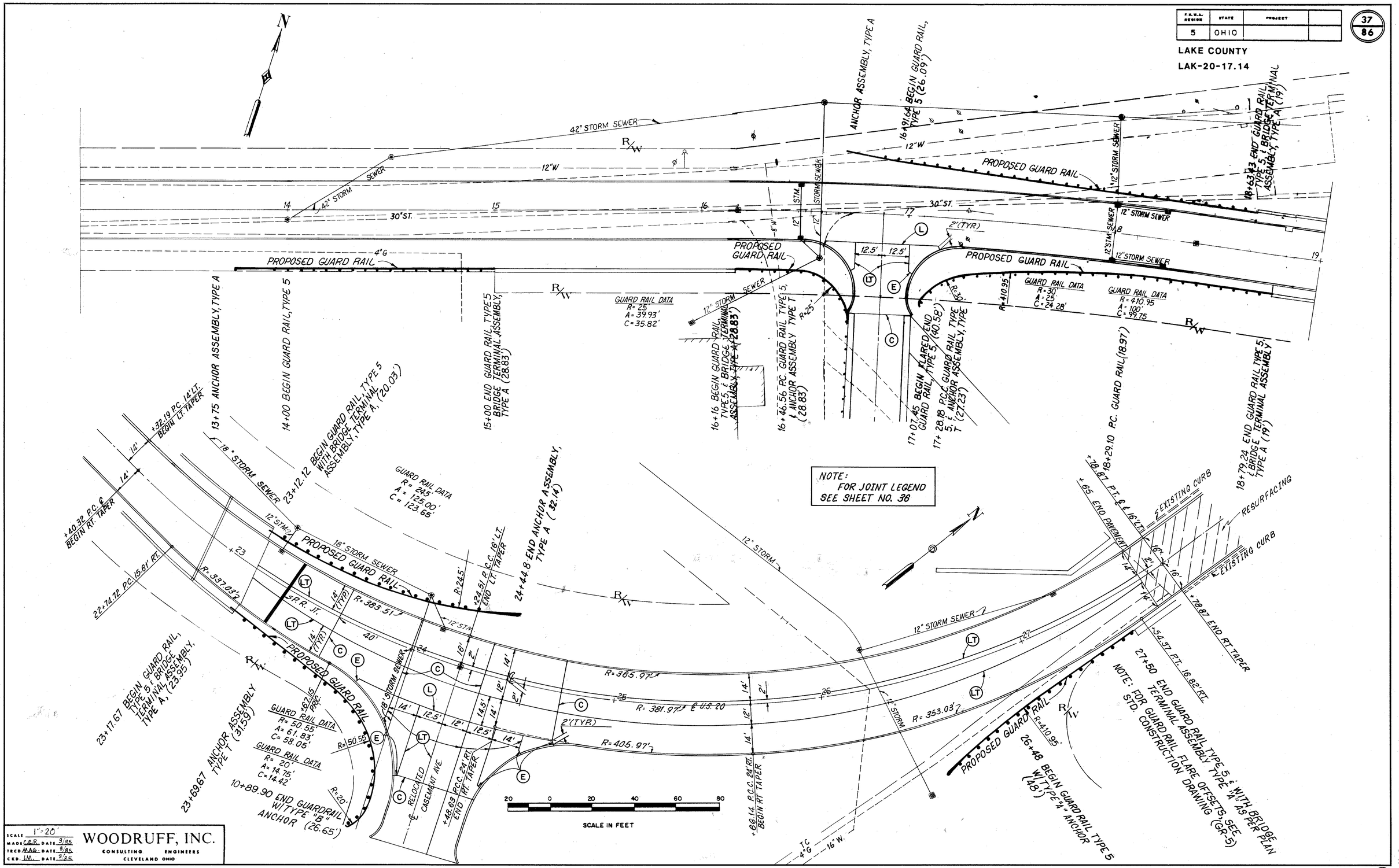

SCALE 1"=20'
MADE C.E.R. DATE 3/85
TRCD MAG. DATE 3/85
CKD. JM. DATE 3/85

WOODRUFF, INC.
CONSULTING ENGINEERS
CLEVELAND OHIO

U.S.20 OVER GRAND RIVER

PAVEMENT JOINT AND MISCELLANEOUS ROADWAY DETAILS (37)

GRADING PLAN

SOUTH SIDE OF U.S. 20

20 0 20 40 60 80

SCALE IN FEET

QUANTITY CALCULATIONS
BY C.E.R. DATE 9-85
CHKD. I.M. DATE 9-85
WOODRUFF, INC.

F.H.W.A. REGION	STATE	PROJECT	
5	OHIO		

38
86

LAKE COUNTY
LAK-20-17.14

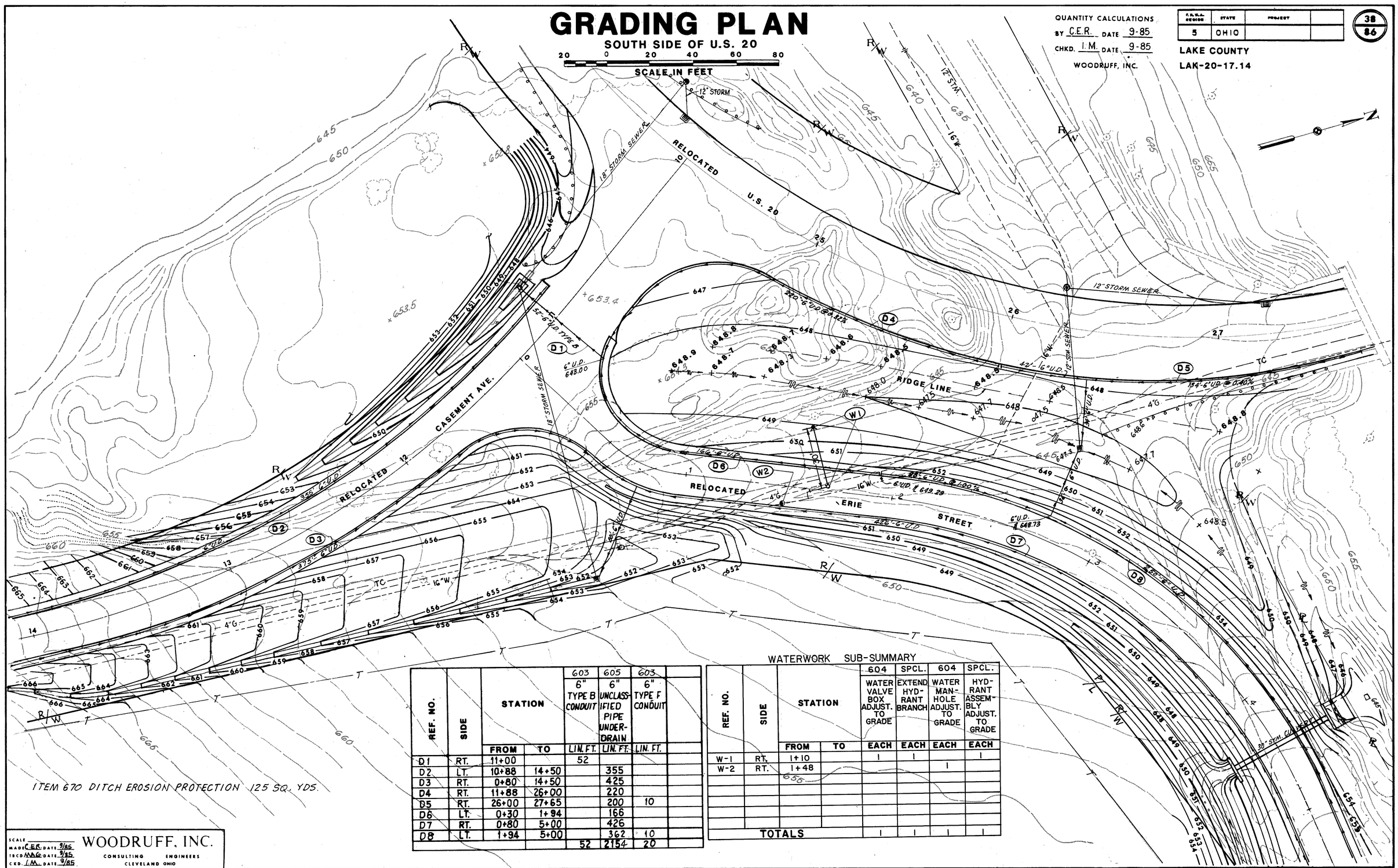

ITEM 670 DITCH EROSION PROTECTION 125 SQ. YDS.

REF. NO.	SIDE	STATION FROM	STATION TO	603 6" TYPE B CONDUIT LIN. FT.	605 6" UNCLASSIFIED PIPE UNDER-DRAIN LIN. FT.	603 6" TYPE F CONDUIT LIN. FT.	
D1	RT.	11+00		52			
D2	LT.	10+88	14+50		355		
D3	RT.	0+80	14+50		425		
D4	RT.	11+88	26+00		220		
D5	RT.	26+00	27+65		200	10	
D6	LT.	0+30	1+94		166		
D7	RT.	0+80	5+00		426		
D8	LT.	1+94	5+00		362	10	
				52	2154	20	

WATERWORK SUB-SUMMARY

REF. NO.	SIDE	STATION FROM	STATION TO	604 WATER VALVE BOX ADJUST. TO GRADE EACH	SPCL. EXTEND HYD-RANT BRANCH EACH	604 MAN-HOLE ADJUST. TO GRADE EACH	SPCL. HYD-RANT ASSEM-BLY ADJUST. TO GRADE EACH
W-1	RT.	1+10		1	1		1
W-2	RT.	1+48				1	
TOTALS				1	1	1	1

SCALE
MADE C.E.R. DATE 9/85
TRCD MAG DATE 9/85
CKD. I.M. DATE 9/85

WOODRUFF, INC.
CONSULTING ENGINEERS
CLEVELAND OHIO

U.S.20 OVER GRAND RIVER

GRADING PLAN

NORTH SIDE OF U.S. 20

20 0 20 40 60 80

SCALE IN FEET

F.H.W.A. REGION	STATE	PROJECT	
5	OHIO		

39/86

LAKE COUNTY

LAK-20-17.14

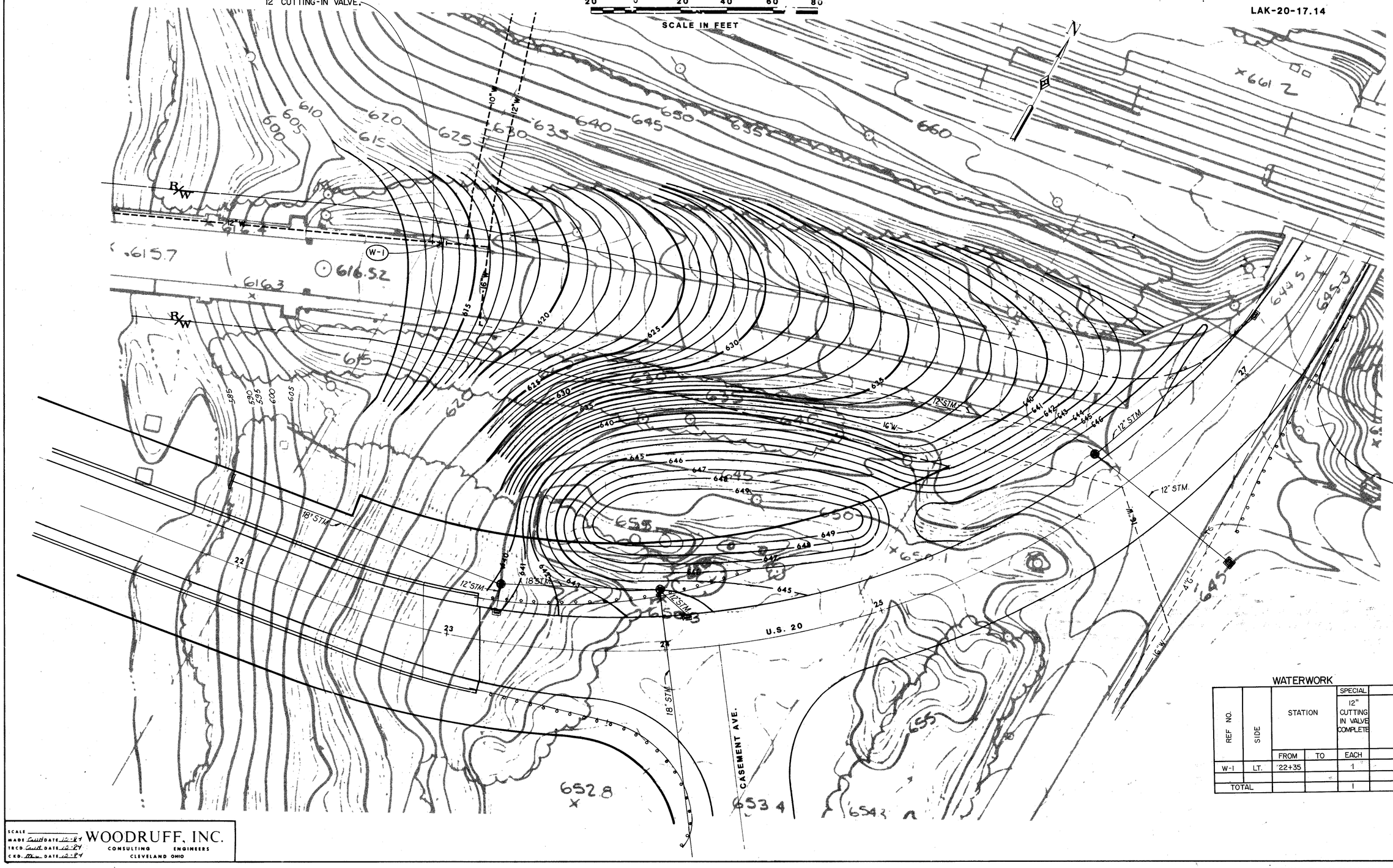

WATERWORK

REF NO.	SIDE	STATION FROM	STATION TO	SPECIAL 12" CUTTING IN VALVE COMPLETE EACH	
W-1	LT.	22+35		1	
TOTAL				1	

SCALE
MADE CWH DATE 10-84
TRCD. CWH DATE 10-84
CKD. MW DATE 10-84

WOODRUFF, INC.
CONSULTING ENGINEERS
CLEVELAND OHIO

U.S.20 OVER GRAND RIVER

GRADING PLAN NORTH SIDE S.R. 20 (39)

QUANTITY CALCULATIONS
BY C.E.R. DATE 9-85
CHKD. I.M. DATE 9-85
WOODRUFF, INC.

F.H.W.A. REGION	STATE	PROJECT	
5	OHIO		

LAKE COUNTY
LAK-20-17.14

40
86

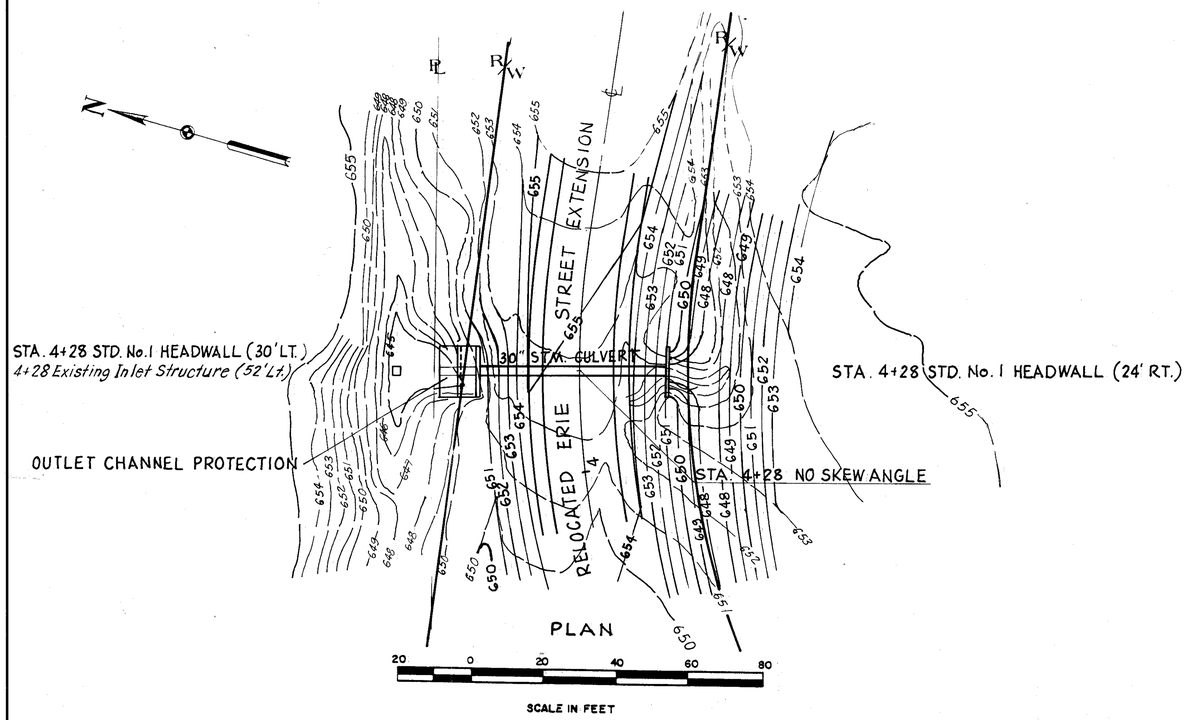

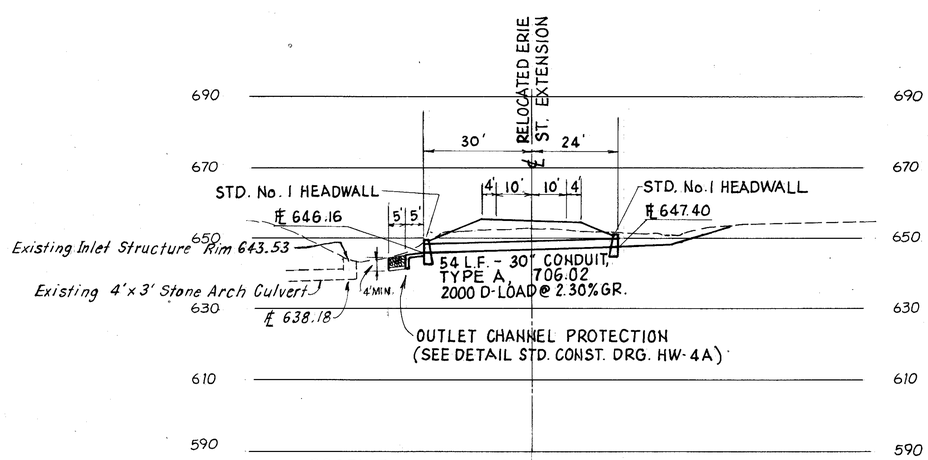

PROFILE STA. 4+28 RELOCATED ERIE STREET EXTENSION

ESTIMATED QUANTITIES

603 Conduit Type A, 30" 706.02, 2000 D-Load	*54 Lin. Ft.*
601 Riprap Using 6" Reinforced Concrete Slab	*14 Sq. Yds.*
601 Rock Channel Protection, Type B with Bedding	*10 Cu. Yds.*
602 Concrete Masonry	*9.4 Cu. Yds.*

Drainage Area = 23.6 Acres
Q10 = 29.6 c.f.s.

SCALE 1"=20'
MADE C.E.R. DATE 9/85
TRCD. MAG. DATE 9/85
CKD. I.M. DATE 9/85

WOODRUFF, INC.
CONSULTING ENGINEERS
CLEVELAND OHIO

U.S.20 OVER GRAND RIVER

PAVEMENT MARKING AND SIGN SUB-SUMMARIES

F.H.W.A. REGION	STATE	PROJECT	
5	OHIO		

42 / 86

LAKE COUNTY

LAK-20-17.14

QUANTITY CALCULATIONS

BY EJK DATE 7-84

CHKD. MKC DATE 1-85

WOODRUFF, INC.

ITEM 621 PAVEMENT MARKING

STATION FROM	STATION TO	CENTERLINES, DOUBLE, SOLID	CHANNELIZING LINES	STOP LINES	LANE ARROWS	TRANSVERSE LINES	WORD ON PAVEMENT, "ONLY", 72"		REMARKS
		LIN. FT.	LIN. FT.	LIN. FT.	EACH	LIN. FT.	EACH		
13+65	23+90	1175							U.S. 20
22+40	23+30					45			"
24+50	29+25	685							"
24+50	25+30		80						"
24+50	25+00				1				"
25+75	27+80					60			"
24+75							1		"
10+34				37					CASEMENT
10+34	10+90		56						"
10+44					2				"
10+64							2		"
10+94	10+90	56							"
11+70	14+75	305							"
0+34				20					ERIE ST. EXT.
0+34	5+25	491							"
TOTAL		2712	136	57	3	105	3		

0.514 MI.

ITEM 630 TRAFFIC SIGNS

REFERENCE No.	STATION	SIDE		SIGNS CODE No	SIGNS SIZE	SIGNS, FLAT SHEET	NUMBER OF SUPPORTS	GROUND MOUNTED SUPPORTS No. 3 POST	REMOVAL OF GROUND MOUNTED SIGN AND STORAGE	REMOVAL OF GROUND MOUNTED POST SUPPORT	SIGNS, FLAT SHEET TYPE G SHEETING
						S.F.	EA.	LIN. FT.	EACH	EACH	S.F.
S-1											
S-2	13+50	Rt		R-10-24	24"x30"	5.0	0	0	1		
S-3		Rt							1	1	
S-4											
S-5									1	1	
S-6	16+50	Lt		R-10-24	24"x30	5.0	1	13			
S-7									1	1	
S-8									1	1	
S-9									1	1	
S-10									1	1	
S-11	18+00	LT		M-1-24-2	24"x24"	4.0	1	13			
				M-40-24	24"x12"	2.0					
S-12									1	1	
S-13	18+40	Rt		W-26-30	30"x30"	6.25	1	13			
S-14									1	1	
S-15									2	1	
S-16									1	1	
S-17									1	1	
S-18									1	1	
S-19									2	1	
S-20									1		
S-21	24+25	Lt		M-50-66	66"x24"	11.0	2	26			
S-22	24+50	Lt		R-31Q-30	30"x30"	6.25	1	13			
S-23									1	1	
S-24	26+15	Lt		R-31Q-30	30"x30"	6.25	1	13			
S-25									3	1	
S-26									1		
S-27									1	1	
S-28									1	1	
S-29									1	1	
S-30	10+36	Lt		R-1-30	30"x30"		1	13			6.25
S-31	10+90	Lt		R-31F-36	36"x30"	7.5	2	26			
S-32	12+50	Rt		R-10-24	24"x30"	5.0	1	13			
S-33	1+00	Rt		W-48-30	30"x30"	6.25	1	13			
S-34	0+45	Lt		R-1-30	30"x30"		1	13			6.25
S-35	12+40	Lt		M-17-24	24"x12"	2.0	1	13			
				M-1-24-2	24"x24"	4.0	1	13			
S-36									1	1	
S-37	14+50	Lt		W-45-36	36"x36"	9.0	1	13			
S-38	29+40	Lt		W-26-30	30"x30"	6.25	1	13			
TOTAL						85.8	17	221	26	19	12.5

614 AND 621 PAVEMENT MARKINGS

A QUANTITY OF 0.51 MILES OF TEMPORARY CENTER LINES, CLASS II AND 136 LIN. FT. OF TEMPORARY CHANNELIZING LINE, CLASS I ARE CARRIED TO THE GENERAL SUMMARY TO BE USED AS DIRECTED BY THE ENGINEER.

THE ROAD SHALL NOT BE OPENED TO TRAFFIC WITHOUT EITHER THE PERMANENT OR TEMPORARY CENTER LINE AND CHANNELIZING LINE IN PLACE.

SCALE ____ MADE ____ DATE ____ TRCD. EJK DATE 7-84 CKD. MKC DATE 1-85

WOODRUFF, INC.
CONSULTING ENGINEERS
CLEVELAND OHIO

U.S. 20 OVER GRAND RIVER

1-H

FHWA REGION	STATE	PROJECT	
5	OHIO		

LAKE COUNTY
LAK-20-17.19

42A
86

614 WORK ZONE PAVEMENT MARKINGS

GENERAL

THE CONTRACTOR SHALL FURNISH, INSTALL, MAINTAIN AND WHEN NECESSARY, REMOVE WORK ZONE RETROREFLECTIVE PAVEMENT MARKINGS ON EXISTING, RECONSTRUCTED, RESURFACED OR TEMPORARY ROADS WITHIN THE WORK LIMITS, IN ACCORDANCE WITH THE FOLLOWING REQUIREMENTS.

THE MARKINGS SHALL BE EVALUATED BY THE ENGINEER IN ACCORDANCE WITH THE THREE PERFORMANCE PARAMETERS CONTAINED IN SUPPLEMENT 1047. THE MARKINGS SHALL BE REPAIRED OR REPLACED WHEN THE NUMERICAL RATING OF A PARAMETER IS (a) SIX OR LOWER FOR DURABILITY, (b) FOUR OR LOWER FOR VISUAL EFFECTIVENESS AND (c) FOUR OR LOWER FOR NIGHT VISIBILITY. THE CONTRACTOR SHALL REPAIR OR REPLACE UNSATISFACTORY MARKINGS IMMEDIATELY AND AT NO ADDITIONAL COST TO THE STATE.

THE CONTRACTOR SHALL, IN ADVANCE OF ANY SECTION OF ROADWAY LACKING OMUTCD FULL PATTERN STANDARD DIMENSION EDGE LINE OR CENTER LINE MARKINGS, ERECT A "NO EDGE LINES" (OW-167-36) SIGN OR "UNMARKED NO PASSING ZONES" (OW-168-36) SIGN OR BOTH AS MAY BE APPROPRIATE. THESE SIGNS SHALL BE IN PLACE PRIOR TO EXPOSING THE ROADWAY TO TRAFFIC. THESE SIGNS SHALL ALSO BE ERECTED ON EACH ENTRANCE RAMP, AT INTERSECTIONS OF THROUGH ROADS TO WARN ENTERING OR TURNING TRAFFIC OF THE CONDITION AND AT LEAST ONCE EVERY TWO MILES ALONG THE ROADWAY. THESE SIGNS SHALL BE REMOVED WHEN THEY NO LONGER APPLY.

TEMPORARY PAVEMENT MARKING MATERIALS

UNLESS OTHERWISE INDICATED ON THE PLANS, TEMPORARY PAVEMENT MARKINGS MAY BE EITHER 621.02 PAINT OR 947.03 TYPE B OR C PREFORMED MATERIAL.

PAINT

PAINTED MARKINGS SHALL BE IN ACCORDANCE WITH 621 EXCEPT THAT (1) PARAGRAPH 621.14 SHALL NOT APPLY, (2) WHERE THE MARKINGS ARE NOT LIABLE TO BE TRACKED, EITHER CONVENTIONAL OR FAST DRY PAINT MAY BE USED FOR 621.02, AND (3) WHEN APPLIED TO NEW ASPHALT PAVEMENT SURFACES OR PLANED ASPHALT PAVEMENT SURFACES, THE SPECIFIED APPLICATION RATE SHALL BE AS FOLLOWS:

WIDTH OF LINE, IN.	4	6	8	12	24
	GALLONS PER MILE OF LINE				
SOLID LINE	24	36	48	72	144
DASHED LINE	6	9			
DOTTED LINE	8	12			

TYPE B AND TYPE C PREFORMED MATERIAL

PREFORMED MATERIAL SHALL COMPLY WITH 947.03 EXCEPT THAT NO PREFORMED MATERIAL CONTAINING METAL SHALL BE PLACED ON ANY SURFACE UNLESS IT WILL BE REMOVED LATER BY THE CONTRACTOR. TEMPORARY PAVEMENT MARKINGS OF 947.03 PREFORMED MATERIAL SHALL BE REMOVED PRIOR TO PLACEMENT OF 621 OR 847 SURFACE COURSE MARKINGS AT THAT LOCATION. PREFORMED MATERIAL SHALL BE APPLIED IN ACCORDANCE WITH 847 EXCEPT AS MODIFIED HEREIN.

PLACEMENT

TEMPORARY MARKINGS SHALL BE COMPLETE AND IN PLACE ON ALL PAVEMENT, INCLUDING RAMPS, PRIOR TO EXPOSING IT TO TRAFFIC. WHEN TEMPORARY MARKINGS CONFLICT WITH THE TRAFFIC PATTERN, THEY SHALL BE REMOVED BY THE CONTRACTOR IN ACCORDANCE WITH 621.134.

LINE PLACEMENT TOLERANCE FOR FINAL SURFACES SHALL BE IN ACCORDANCE WITH 621.052. ON SURFACES OTHER THAN THE FINAL, THE TOLERANCE PERMITTED SHALL BE TWICE THAT IN 621.052.

LAYOUT AND PREMARKING SHALL BE IN ACCORDANCE WITH 621.051.

TEMPORARY MARKING CLASSES

CLASS I MARKINGS

CLASS I MARKINGS SHALL BE APPLIED TO THE FULL DIMENSIONS AS DEFINED IN 621 WITH THE FOLLOWING ADDITIONS OR EXCEPTIONS:

1) TRANSVERSE LINES SHALL BE 8-INCHES IN WIDTH.
2) STOP LINES SHALL BE 12-INCHES IN WIDTH.
3) CROSS WALK LINES SHALL BE 8-INCHES IN WIDTH.

CLASS II MARKINGS

CLASS II MARKINGS (ABBREVIATED) SHALL BE DEFINED AS FOLLOWS:

CENTER LINES SHALL CONSIST OF SINGLE, YELLOW 4-INCH WIDE BY A MINIMUM OF 48-INCH LONG DASHES SPACED AT A MAXIMUM OF 40-FOOT INTERVALS.

LANE LINES SHALL CONSIST OF WHITE 4-INCH WIDE BY A MINIMUM OF 48-INCH LONG DASHES SPACED AT A MAXIMUM OF 40-FOOT INTERVALS.

GORE MARKINGS SHALL BE TWO CONTINUOUS, WHITE 4-INCH LINES PLACED AT THE THEORETICAL GORE OF AN EXIT RAMP OR DIVERGING ROADWAYS.

THE PAINT APPLICATION RATE SHALL BE NOT LESS THAN 2.4 GALLONS PER MILE FOR LANE LINE AND CENTER LINE AND 24 GALLONS PER MILE FOR GORE MARKINGS.

CONFLICTING EXISTING MARKINGS

THE CONTRACTOR SHALL, PRIOR TO PLACING TEMPORARY MARKINGS, REMOVE ALL CONFLICTING EXISTING MARKINGS VISIBLE TO THE TRAVELING PUBLIC DURING DAYLIGHT OR NIGHTTIME HOURS IN ACCORDANCE WITH 621.134. THE COST FOR REMOVAL OF CONFLICTING MARKINGS SHALL BE INCLUDED IN 614 MAINTAINING TRAFFIC UNLESS SPECIFICALLY ITEMIZED.

THE CONTRACTOR SHALL ALSO REMOVE THE PRISMATIC RETRO-REFLECTOR WITHIN ANY RAISED PAVEMENT MARKER (RPM) WHICH IS IN CONFLICT WITH THE TEMPORARY PAVEMENT MARKINGS. WHEN THE TEMPORARY PAVEMENT MARKINGS ARE REMOVED AND THE RPM IS NO LONGER IN CONFLICT, THE CONTRACTOR SHALL THOROUGHLY CLEAN THE RECESSED REFLECTOR ATTACHMENT AREA OF THE CASTING AND INSTALL A NEW PRISMATIC RETRO-REFLECTOR OF THE SAME KIND AND COLOR. THE COST FOR THIS WORK SHALL BE INCIDENTAL TO THE VARIOUS PAY ITEMS.

INTERIM MARKINGS

WITHIN 21 CALENDAR DAYS AFTER OPENING ANY LENGTH OF PAVEMENT TO TRAFFIC, THE 621 OR 847 PAVEMENT MARKINGS CALLED FOR IN THE PLANS SHALL BE APPLIED. EQUIVALENT 614 CLASS I, PAINT MARKINGS MAY BE USED IN LIEU OF FINAL MARKINGS. IN THIS EVENT, THE CONTRACTOR SHALL FURNISH ALL LABOR, EQUIPMENT AND MATERIAL NECESSARY TO PLACE AND MAINTAIN 614 CLASS I PAINT MARKINGS AS PART OF THE LUMP SUM BID FOR 614 MAINTAINING TRAFFIC

FOR EACH CALENDAR DAY BEYOND 21 DAYS THAT THIS WORK SHALL REMAIN UNCOMPLETED, THE SUM OF $200 PER CALENDAR DAY WILL BE DEDUCTED FROM ANY MONEY DUE THE CONTRACTOR, NOT AS A PENALTY BUT AS LIQUIDATED DAMAGES.

METHOD OF MEASUREMENT

TEMPORARY PAVEMENT MARKINGS WILL BE MEASURED COMPLETE IN PLACE, BY CLASS AND MATERIAL, IN THE UNITS DESIGNATED. LINE QUANTITIES WILL BE THE LENGTH OF THE COMPLETED STRIPE, INCLUDING GAPS, INTERSECTIONS, AND OTHER SECTIONS OF PAVEMENT NOT NORMALLY MARKED.

TEMPORARY PAVEMENT MARKINGS WILL INCLUDE THE LAYOUT, APPLICATION AND REMOVAL OF THE MARKINGS, WHEN REQUIRED.

BASIS OF PAYMENT

PAYMENT FOR ACCEPTED QUANTITIES COMPLETE IN PLACE WILL BE MADE AT THE CONTRACT UNIT PRICE. PAYMENT SHALL BE FULL COMPENSATION FOR ALL MATERIALS, LABOR, INCIDENTALS AND EQUIPMENT FOR PLACEMENT, MAINTENANCE AND NECESSARY REMOVAL OF THE MARKINGS.

ITEM	UNIT	DESCRIPTION
614	MILES	TEMPORARY LANE LINES, CLASS _____, ____*
614	MILES	TEMPORARY CENTER LINES, CLASS _____, ____*
614	LIN. FT.	TEMPORARY CHANNELIZING LINES, CLASS I, ____*
614	MILES	TEMPORARY EDGE LINES, CLASS I, ____*
614	LIN. FT.	TEMPORARY GORE MARKINGS, CLASS II, ____*
614	LIN. FT.	TEMPORARY STOP LINES, CLASS I, ____*
614	LIN. FT.	TEMPORARY CROSSWALK LINES, CLASS I, ____*
614	EACH	TEMPORARY LANE ARROWS, CLASS I, ____*
614	EACH	TEMPORARY RAILROAD SYMBOL MARKINGS, CLASS I, ____*
614	EACH	TEMPORARY WORD "ONLY" ON PAVEMENT, 72-INCH, CLASS I, ____*
614	LIN. FT.	TEMPORARY TRANSVERSE LINES, CLASS I, ____*
614	LIN. FT.	TEMPORARY DOTTED LINES, CLASS I, ____*

*TYPE MATERIAL (621 PAINT, 947.03 TYPE B OR 947.03 TYPE C OR LEFT BLANK TO PERMIT ANY OF THE THREE)

fh4

~~621 EDGE LINES ON NEW ASPHALT PAVEMENTS~~

~~EDGE LINES SHALL BE IN ACCORDANCE WITH 621 EXCEPT THAT (1) ON EVERY ROADWAY AND RAMP, EDGE LINES SHALL BE IN PLACE PRIOR TO EXPOSING IT TO TRAFFIC, (2) WHERE THE EDGE LINES ARE NOT LIABLE TO BE TRACKED, EITHER CONVENTIONAL OR FAST DRY PAINT MAY BE USED FOR 621.02; AND (3) WHEN APPLIED TO NEW ASPHALT PAVEMENT THE SPECIFIED APPLICATION RATE SHALL BE 24 GALLONS PER MILE.~~

~~614 WORK ZONE MARKING SIGNS~~

~~THE CONTRACTOR SHALL FURNISH, INSTALL, MAINTAIN AND SUBSEQUENTLY REMOVE WORK ZONE MARKING SIGNS (OW-167 AND OW-168) WITHIN THE WORK LIMITS IN ACCORDANCE WITH THE FOLLOWING REQUIREMENTS.~~

~~THE CONTRACTOR MAY USE SIGNS AND SUPPORTS IN USED BUT GOOD CONDITION PROVIDED THE SIGNS MEET CURRENT DEPARTMENT SPECIFICATIONS. SIGN FACES SHALL BE REFLECTORIZED WITH TYPE G SHEETING COMPLYING WITH THE REQUIREMENTS OF 730.19. WORK ZONE MARKING SIGNS SHALL BE PROVIDED WITH SUITABLE YIELDING SUPPORTS OF SUFFICIENT STRENGTH AND STABILITY.~~

~~WORK ZONE MARKING SIGNS WILL BE MEASURED AS THE NUMBER OF SIGN INSTALLATIONS, INCLUDING THE SIGN AND NECESSARY SUPPORTS. ALL OTHER WORK ZONE SIGNS SHALL BE INCLUDED IN 614 MAINTAINING TRAFFIC UNLESS SEPARATELY ITEMIZED.~~

~~PAYMENT FOR ACCEPTED QUANTITIES, COMPLETE, IN PLACE WILL BE MADE AT THE CONTRACT UNIT PRICE. PAYMENT SHALL BE FULL COMPENSATION FOR ALL MATERIALS, LABOR, INCIDENTIALS AND EQUIPMENT FOR PLACEMENT, MAINTENANCE AND REMOVAL OF THE SIGNS.~~

ITEM	UNIT	DESCRIPTION
614	EACH	WORK ZONE MARKING SIGNS

~~A QUANTITY OF _____ EACH WORK ZONE MARKING SIGNS (_____ EACH "NO EDGE LINES" OW -167 AND _____ EACH "UNMARKED NO PASSING ZONES" OW-168) ARE CARRIED TO THE GENERAL SUMMARY TO BE USED AS DIRECTED BY THE ENGINEER.~~

2-21-86

PAVEMENT MARKING AND SIGNING PLAN

F.A.H.S.A. REGION	STATE	PROJECT	
5	OHIO		

43
86

LAKE COUNTY
LAK-20-17.14

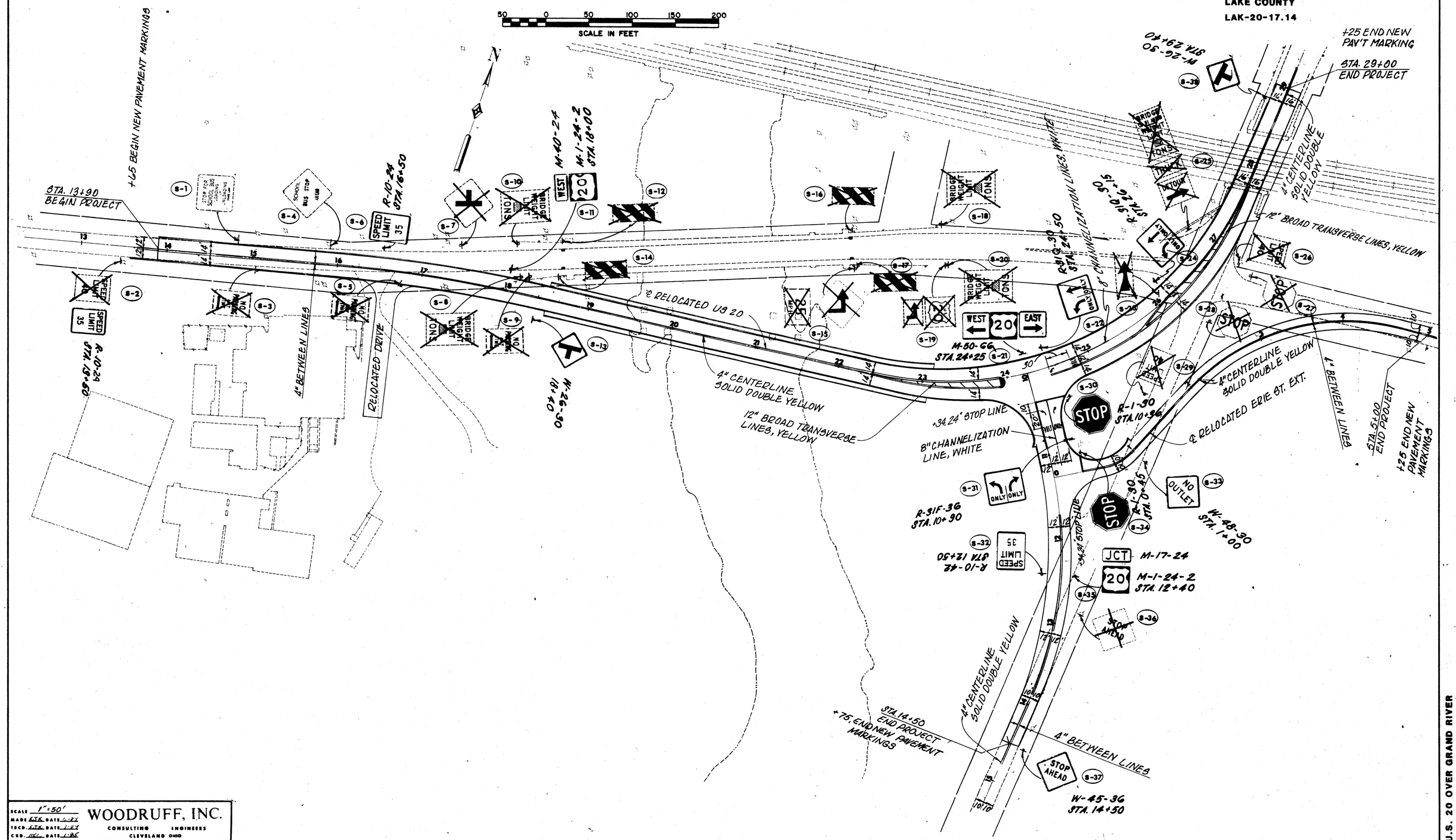

SCALE 1"=50'
MADE ETK DATE 1-84
TRCD. ETK DATE 1-84
CKD. MC DATE 1-84

WOODRUFF, INC.
CONSULTING ENGINEERS
CLEVELAND OHIO

U.S. 20 OVER GRAND RIVER

F.H.W.A. REGION	STATE	PROJECT	
5	OHIO		

LAKE COUNTY
LAK-20-17.14

44
86

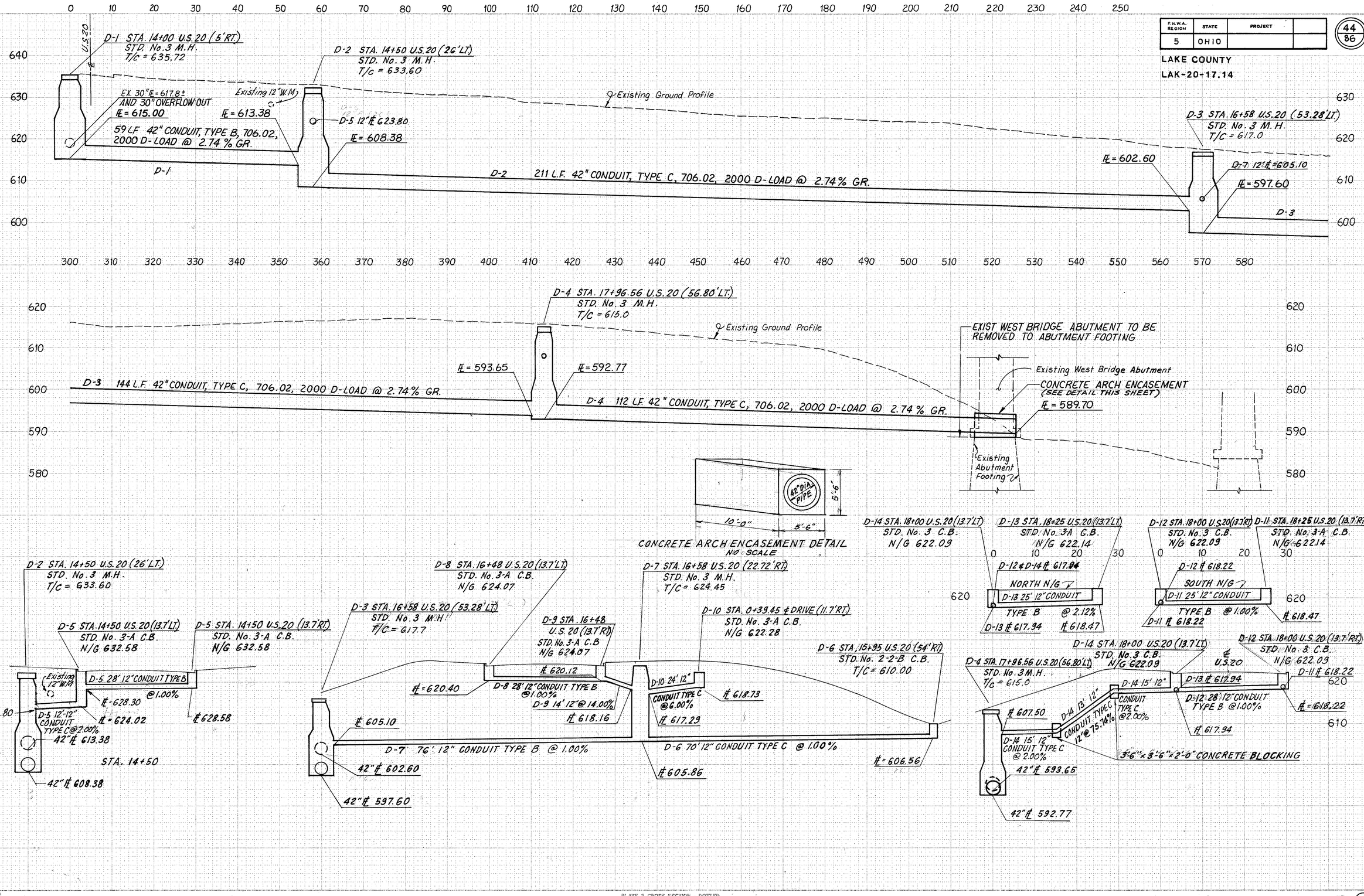

U.S.20 OVER GRAND RIVER

STORM SEWER PROFILES (44)

F.H.W.A. REGION	STATE	PROJECT	
5	OHIO		

LAKE COUNTY

LAK-20-17.14

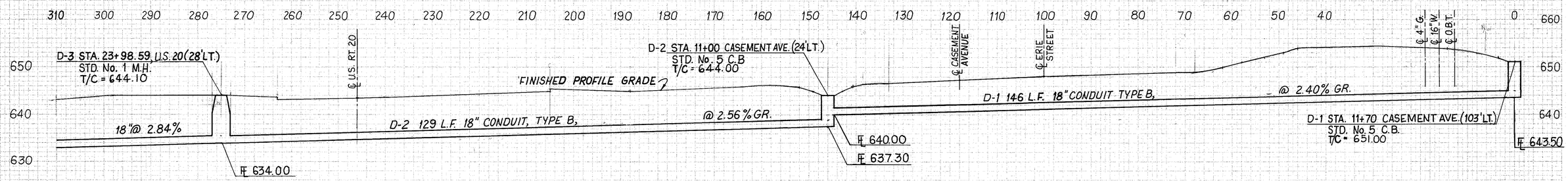

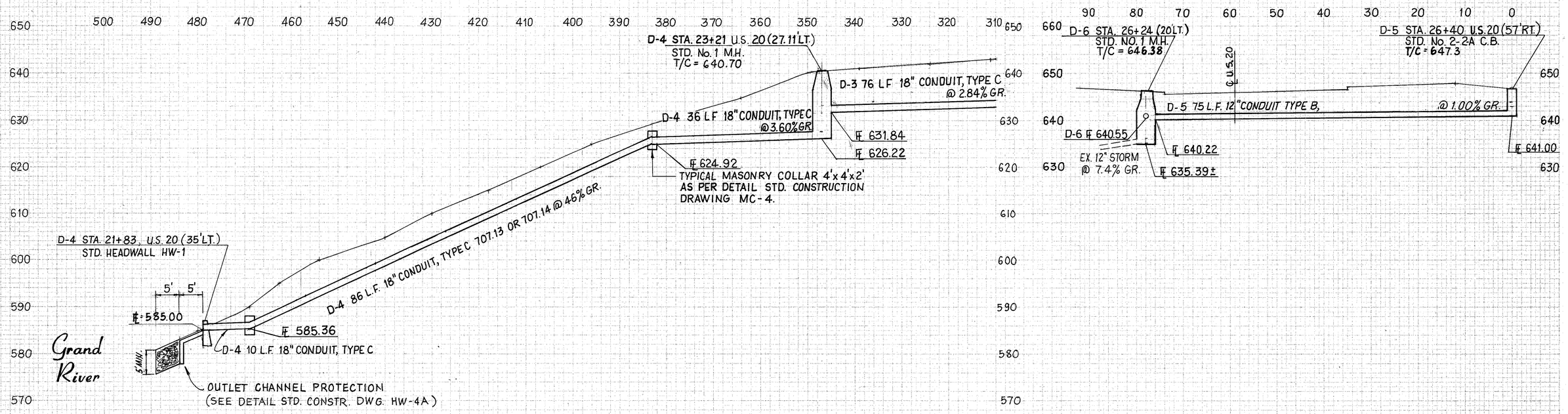

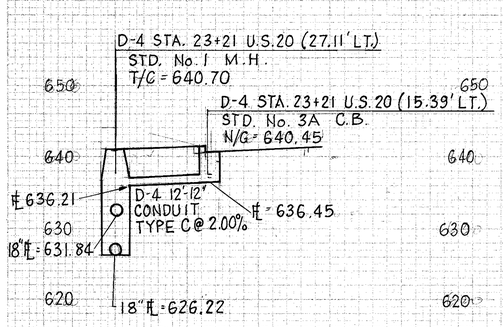

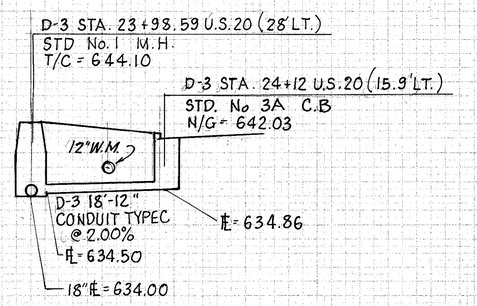

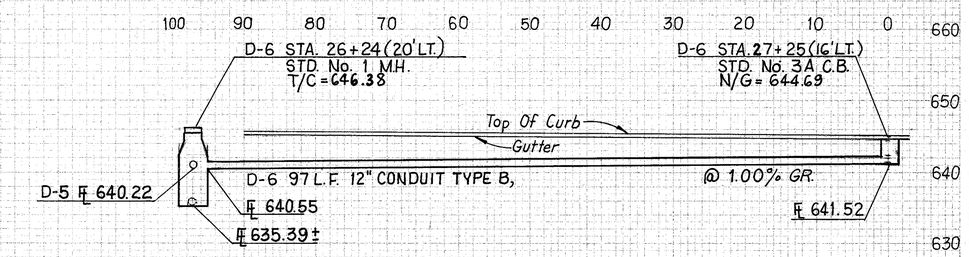

U.S.20 OVER GRAND RIVER

F.H.W.A. REGION	STATE	PROJECT	
5	OHIO		

46 / 86

LAKE COUNTY
LAK-20-17.14

Notes:
All reinforcing bar marks shall be prefixed "RW".
For General Notes, Estimated Quantities and Reinforcement Schedule see sheet 2/2.

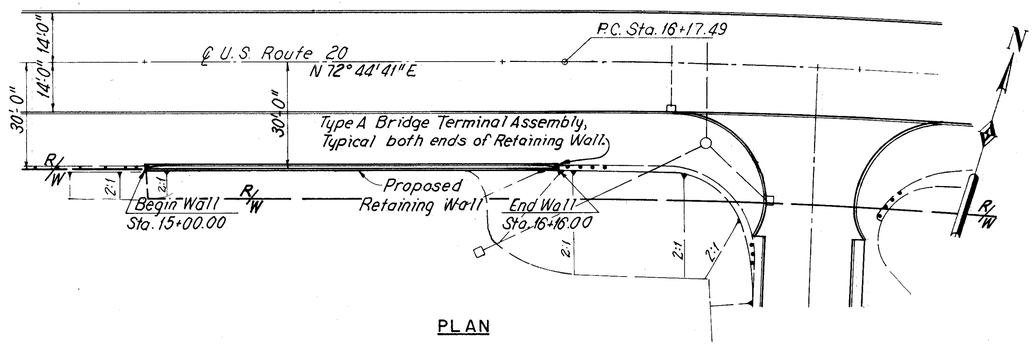

PLAN

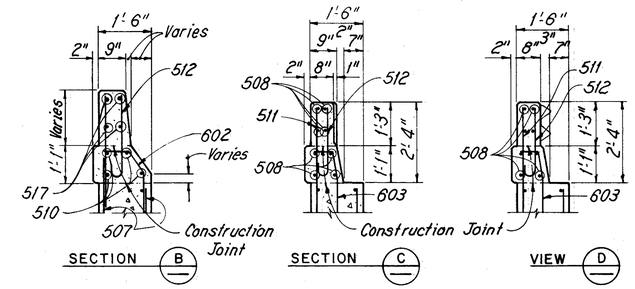

TRANSITION SECTIONS

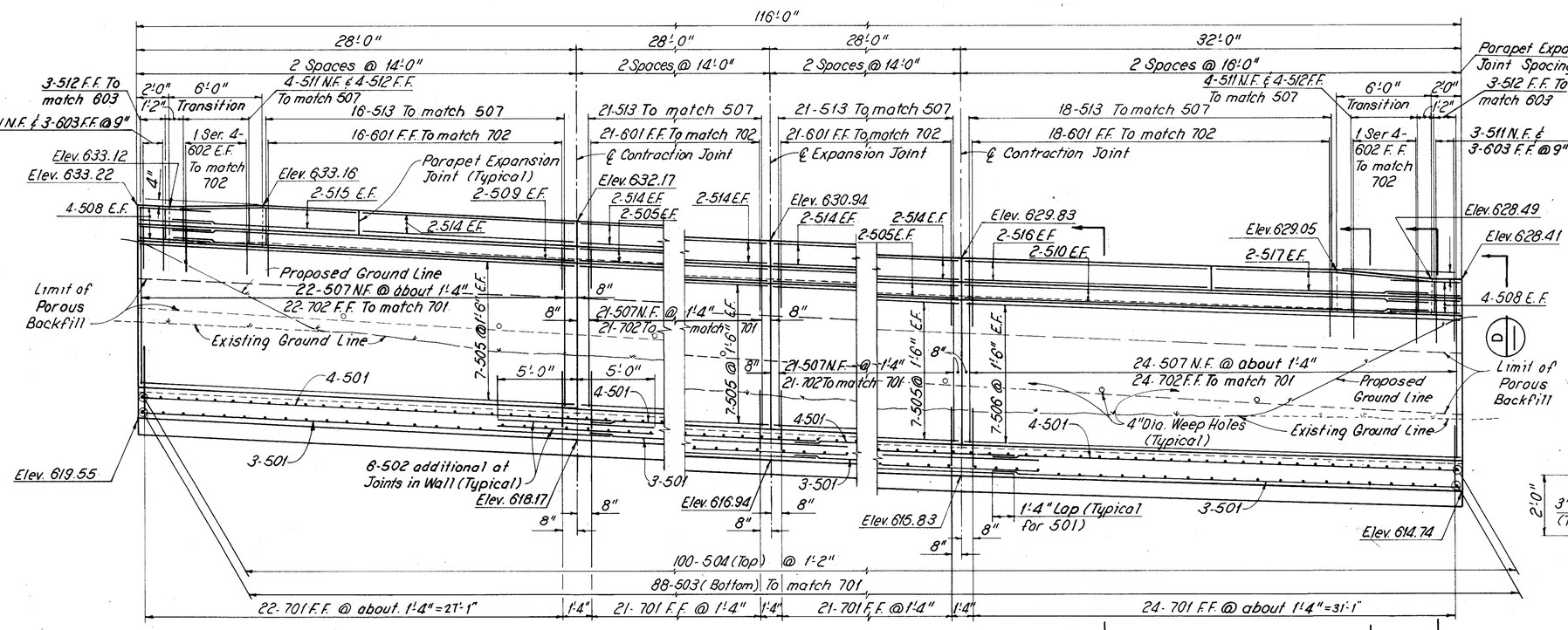

ELEVATION

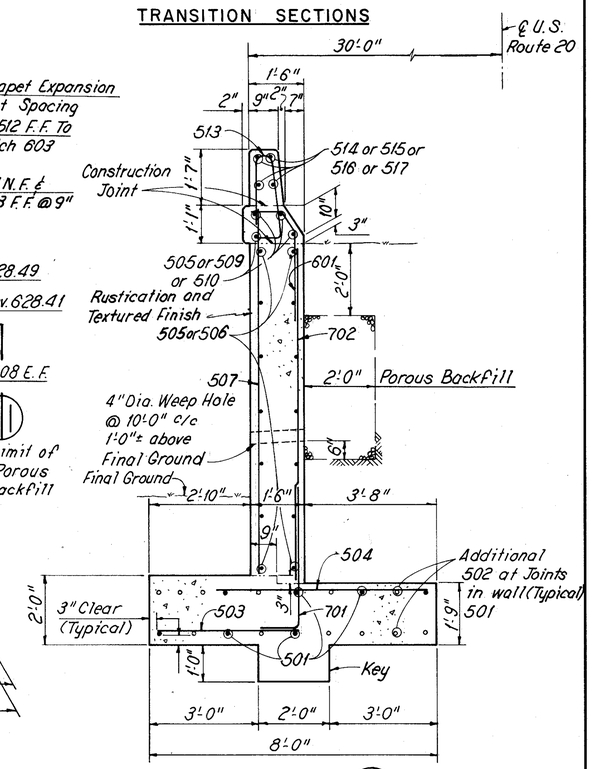

SECTION A

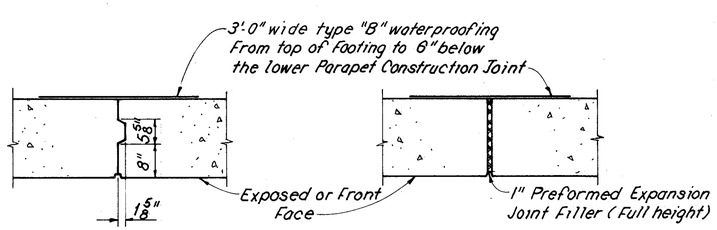

CONTRACTION JOINT DETAIL

EXPANSION JOINT DETAIL

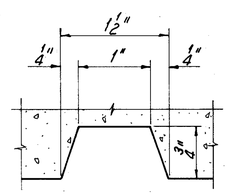

VERTICAL RUSTICATION GROOVE
(Space at 4'-0" c/c)

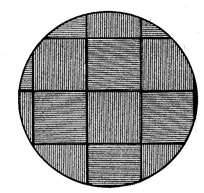

TEXTURED FINISHED CONCRETE DETAIL

WOODRUFF, INC.
CONSULTING ENGINEERS
CLEVELAND, OHIO

RETAINING WALL
AT STATION 15+00
U.S. ROUTE 20 OVER
THE GRAND RIVER

LAKE COUNTY OHIO

MADE	TRACED	CHECKED	REVIEWED	REVISED
RPS / RCK	RCK	JES		
DATE 5-9-85	DATE 5-13-85	DATE 5-85	DATE	SHEET 1/2

U.S. 20 OVER GRAND RIVER

F.H.W.A. REGION	STATE	PROJECT	
5	OHIO		

LAKE COUNTY
LAK-20-17.14

47
86

GENERAL NOTES

REFERENCE SHALL BE MADE TO STANDARD DRAWINGS:

GR-1 DATED 1-11-85

GR-3 DATED 1-21-85

DESIGN SPECIFICATIONS: THIS STRUCTURE CONFORMS TO "STANDARD SPECIFICATIONS FOR HIGHWAY BRIDGES" ADOPTED BY THE AMERICAN ASSOCIATION OF STATE HIGHWAY AND TRANSPORTATION OFFICIALS, 1983, AND THE OHIO "SUPPLEMENT" TO THESE SPECIFICATIONS.

DESIGN STRESSES

CONCRETE CLASS S - COMPRESSIVE STRENGTH 4500 P.S.I.
CONCRETE CLASS C - COMPRESSIVE STRENGTH 4000 P.S.I.
REINFORCING STEEL - ASTM A615, A616, A617 - GRADE 60 MINIMUM YIELD STRENGTH 60,000 P.S.I.

FOUNDATION BEARING PRESSURE: RETAINING WALL FOOTINGS, AS DESIGNED, PRODUCE A MAXIMUM BEARING PRESSURE OF 0.78 TONS PER SQ. FT.

IF CINDER FILL IS ENCOUNTERED AT THE BOTTOM OF FOOTING ELEVATIONS SHOWN ON THE PLANS, THE UNSUITABLE MATERIAL SHALL BE UNDERCUT TO NATURAL GROUND AND REPLACED WITH ITEM 310, SUBBASE, AS DIRECTED BY THE *ENGINEER*

TEXTURED FINISH OF CONCRETE: THE FRONT FACES OF THE RETAINING WALL SHALL HAVE A TEXTURED FINISH AS PRODUCED BY STRIATED FORMS. THE TEXTURED FINISH SHALL BE UNIFORM AND SHALL EXTEND LONGITUDINALLY FOR THE FULL LENGTH OF THE RETAINING WALL AND VERTICALLY FROM THE TOP OF FOOTING UP TO THE LOWER CONSTRUCTION JOINT SEPARATING THE PARAPET CURB WITH THE WALL. FOUR-FOOT BY FOUR FOOT FORM PANELS SHALL BE USED WHERE POSSIBLE. THE PANELS SHALL BE PLACED WITH THE STRIATIONS OF THE FORMS ALTERNATING HORIZONTALLY AND VERTICALLY BETWEEN RUSTICATIONS WHICH ARE LOCATED AND DETAILED ON THE PLANS.

CONCRETE INSERT ANCHOR ASSEMBLY, AS SHOWN ON STD. DWGS. GR-1 AND GR-3, SHALL BE PROVIDED FOR THE ATTACHMENT OF GUARD RAIL TERMINAL CONNECTORS. (INCLUDED WITH RETAINING WALL CONCRETE FOR PAYMENT).

PREFORMED EXPANSION JOINT FILLER IN THE PARAPET EXPANSION JOINTS MAY BE EITHER ½" GRAY SPONGE RUBBER OR ½" GRAY CELLULAR POLYVINYL CHLORIDE (PVC) SPONGE. IF RUBBER IS USED IT SHALL MEET THE REQUIREMENTS OF AASHTO M-153. (INCLUDE WITH PARAPET CONCRETE FOR PAYMENT).

CONCRETE PARAPETS ABOVE UPPER CONSTRUCTION JOINT SHALL BE PLACED IN ALTERNATE SECTIONS BY THE USE OF BULKHEADS. CLOSING SECTIONS SHALL BE PLACED AFTER REMOVAL OF BULKHEADS AND AFTER PLACEMENT OF EXPANSION JOINT FILLER. EXPOSED EDGES OF THE FILLER SHALL BE FLUSH WITH THE SURFACE OF CONCRETE AND SHALL BE FREE OF MORTAR.

ESTIMATED QUANTITIES

ITEM	TOTAL	UNIT	DESCRIPTION	WALL	
310	50	Cu. Yds.	Subbase, Type I	50	
503	267	Cu. Yds.	Unclassified Excavation	267	
503	Lump Sum	Lump	Cofferdams, Cribs and Sheeting	Lump	
509	9,386	Lbs.	Reinforcing Steel Grade 60	9,386	
511	73	Cu. Yds.	Class "C" Concrete, Footing and Keys	73	
511	75	Cu. Yds.	Class "C" Concrete, Wall and Parapet	75	
512	10	Sq. Yds.	Type "B" Waterproofing	10	
516	34	Sq. Ft.	1" Preformed Expansion Joint Filler	34	
518	33	Cu. Yds.	Porous Backfill	33	

QUANTITY CALCULATIONS
BY JRS DATE 5-85
CHKD. AJM DATE 5-85
WOODRUFF, INC.

REINFORCEMENT SCHEDULE

MARK	NUMBER	LENGTH	TYPE	SER. INCR.	WEIGHT (LBS)	A	B	C	D
RW501	28	30'-0"	STR.		876				
RW502	36	10'-0"	STR.		375				
RW503	88	3'-8"	STR.		337				
RW504	100	5'-1"	STR.		530				
RW505	50	27'-8"	STR.		1443				
RW506	14	31'-8"	STR.		462				
RW507	88	10'-3"	STR.		941				
RW508	16	4'-4"	STR.		72				
RW509	4	25'-10"	STR.		108				
RW510	4	29'-10"	STR.		124				
RW511	14	4'-7"	STR.		67				
RW512	14	2'-8"	6		39	2'-1"			
RW513	76	5'-3"	5		416	2'-2"	2'-5"	7½"	
RW514	20	13'-7"	STR.		283				
RW515	4	11'-9"	STR.		49				
RW516	4	15'-7"	STR.		65				
RW517	4	13'-9"	STR.		57				
RW601	76	3'-9"	9		428	9"	6"	2'-5"	8½"
RW602	2 SER. 4	3'-8" / 3'-7"	9	5/16"	44	8" / 7"	5" / 2"	2'-5"	8½"
RW603	6	3'-7"	9		32	7"	2"	2'-5"	8½"
RW701	88	5'-3"	2		944	1'-2"	4'-3"		
RW702	88	9'-5"	STR.		1694				
TOTAL WEIGHT					9,386				

BAR BENDING DIAGRAMS

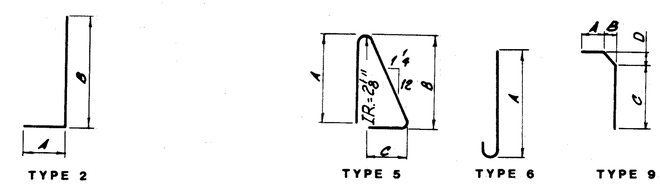

WOODRUFF, INC.
CONSULTING ENGINEERS
CLEVELAND, OHIO

NOTES, QUANTITIES AND REINFORCEMEN SCHEDULE FOR RETAINING WALL AT STATION 15+00

U.S. ROUTE 20 OVER THE GRAND RIVER

LAKE COUNTY OHIO

MADE JRS RCK	TRACED RCK	CHECKED JRS	REVIEWED	REVISED
DATE 5-1-85	DATE 5-16-85	DATE 5-85	DATE	SHEET 2/2

U.S.20 OVER GRAND RIVER

F.H.W.A. REGION	STATE	PROJECT	
5	OHIO		

48
86

LAKE COUNTY
LAK-20-17.14

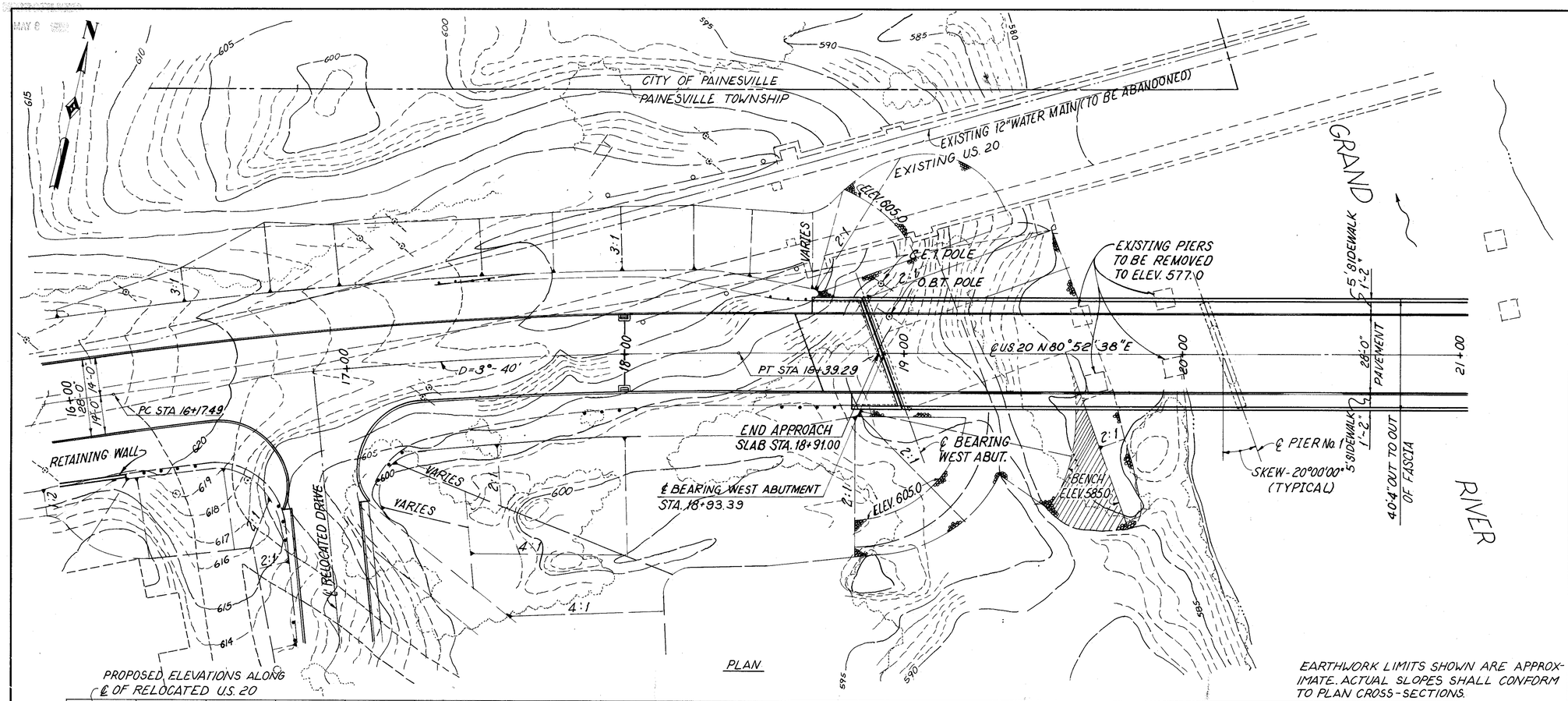

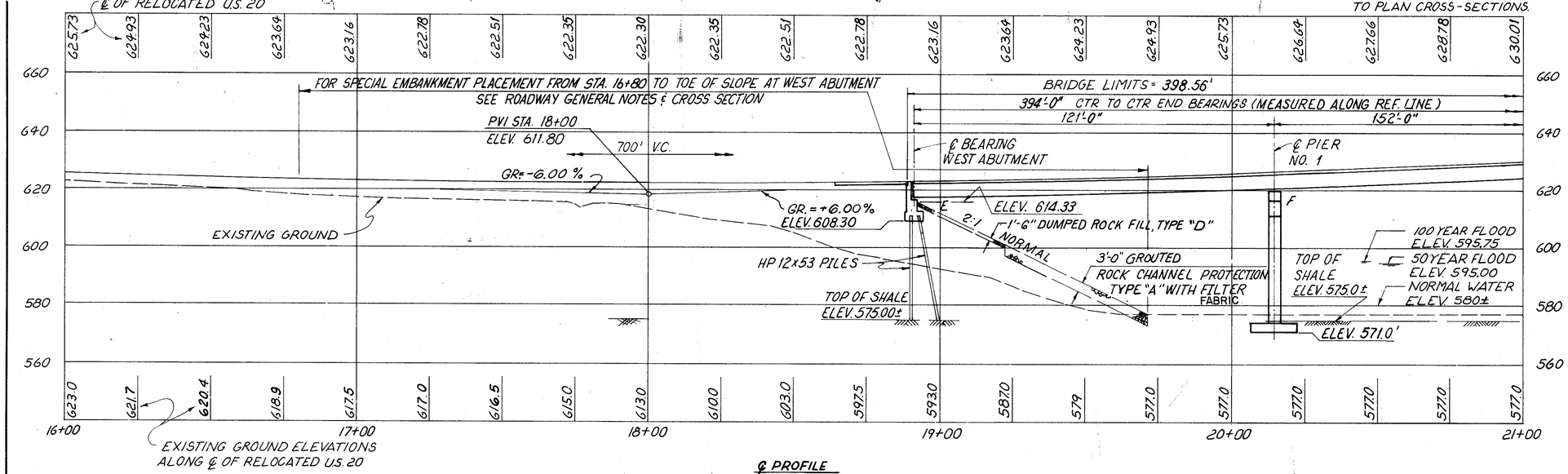

TRAFFIC DATA

1980 ADT = 10,000 VEHICLES PER DAY
2000 ADT = 13,000 VEHICLES PER DAY
% TRUCKS = 10

DRAINAGE DATA

Q_{100} = 27,500 CFS
EL_{100} = 595.75
V_{100} = 7.2 FPS
AREA = 730 SQ. MI.

EXISTING STRUCTURE

TYPE: REINFORCED CONCRETE ARCH BRIDGE WITH TRESTLE SUPPORTED END SPANS AND REINFORCED CONCRETE DECK.
SPANS: 40', 55', 130', 55', & 40'

ROADWAY: 24'-0" F/F OF CURBS W/ 7'-6" WALKS AND PARAPET
SKEW: NONE

WEARING SURFACE: ASPHALTIC CONCRETE

ALIGNMENT: TANGENT

DATE BUILT: 1921

PROPOSED STRUCTURE

TYPE: CONTINUOUS COMPOSITE WELDED STEEL GIRDERS (A 572 STEEL) WITH REINFORCED CONCRETE DECK AND SUBSTRUCTURES.
SPANS: 121'-0", 152'-0" AND 121'-0" C/C BEARINGS ALONG REFERENCE LINE

ROADWAY: VARIES 28.00' TO 31.87' F/F CURBS W/ 15'-0" WALKS AND BRIDGE SIDEWALK RAILING W/ CONCRETE PARAPETS.

SKEW: 20°00'00" RIGHT FORWARD

LOADING: HS 20-44 (CASE II) AND ALTERNATE MILITARY LOADING

WEARING SURFACE: 1" MONOLITHIC CONCRETE

ALIGNMENT: TANGENT AND 15°00'00" CURVE LEFT

SUPERELEVATION: VARIES

APPROACH SLABS: AS-1-81 (25'-0")

WOODRUFF, INC.
CONSULTING ENGINEERS
CLEVELAND, OHIO

SITE PLAN

U.S. ROUTE 20 OVER THE GRAND RIVER

BR. NO.-LAK-20-1723 FROM STA. 18+91.00 TO STA. 22+89.56

LAKE COUNTY OHIO

MADE R.J.P.	TRACED R.C.K.	CHECKED A.J.M.	REVIEWED A.J.M.	REVISED 4-4-86
DATE 5-11-84	DATE 5-11-84	DATE 10/84	DATE 10/84	SHEET 1 / 22

U.S. 20 OVER GRAND RIVER

F.H.W.A. REGION	STATE	PROJECT	
5	OHIO		

LAKE COUNTY
LAK-20-17.14

49
86

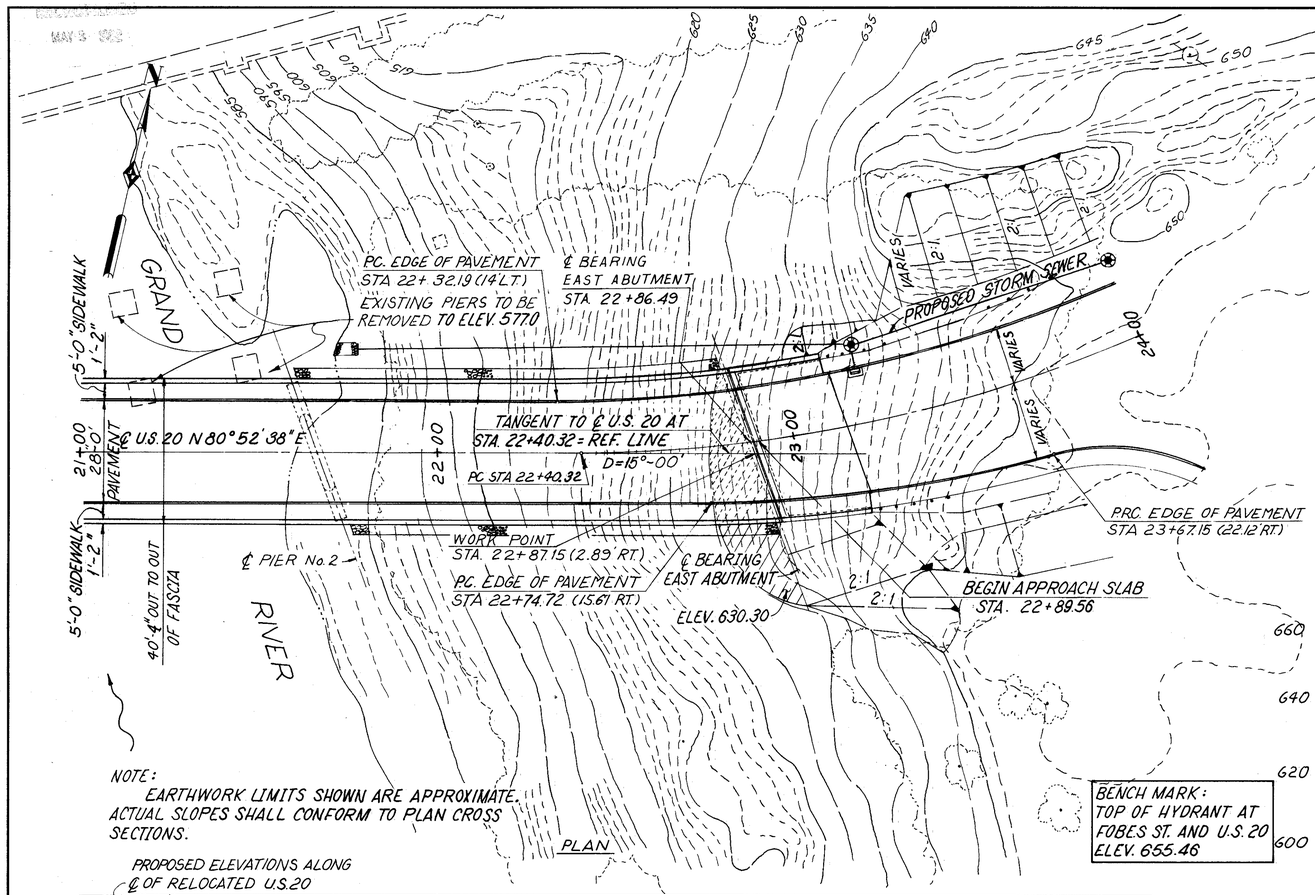

NOTE:
EARTHWORK LIMITS SHOWN ARE APPROXIMATE. ACTUAL SLOPES SHALL CONFORM TO PLAN CROSS SECTIONS.

PLAN

BENCH MARK:
TOP OF HYDRANT AT FOBES ST. AND U.S. 20
ELEV. 655.46

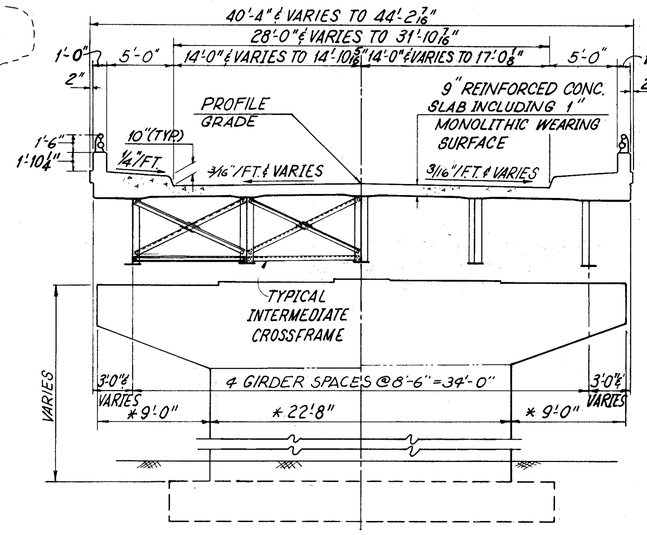

TYPICAL BRIDGE SECTION

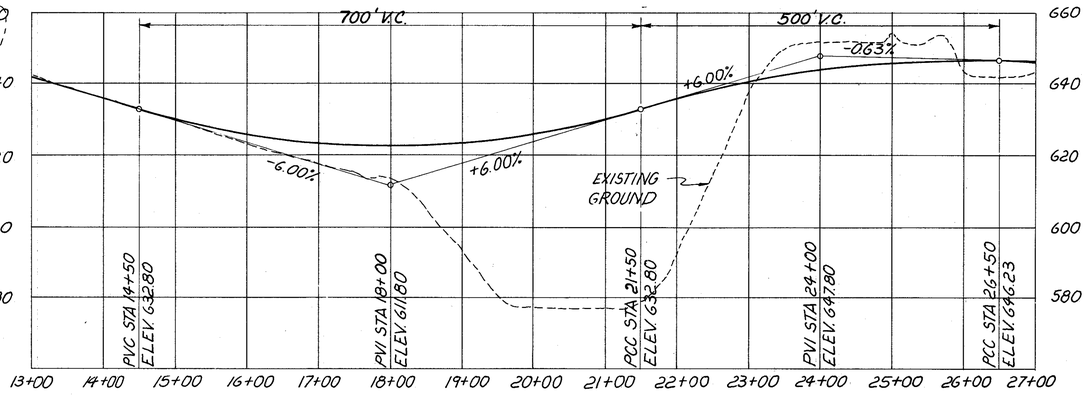

PROFILE RELOCATED U.S. 20
SCALE HORZ. 1" = 100'
VERT. 1" = 20'

PROPOSED ELEVATIONS ALONG ℄ OF RELOCATED U.S. 20

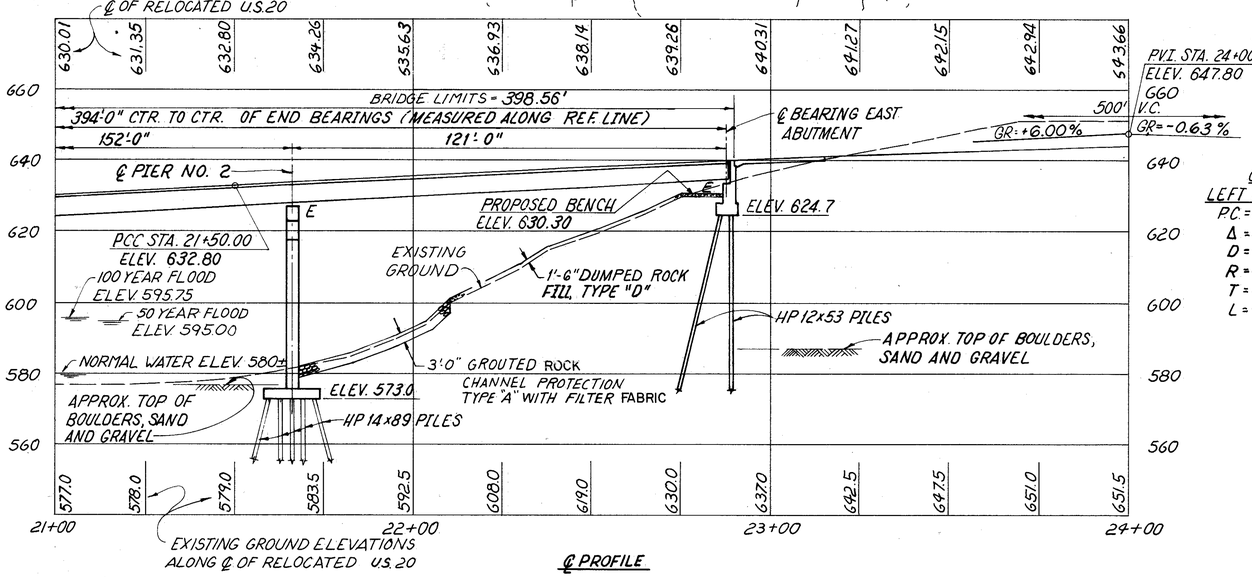

EXISTING GROUND ELEVATIONS ALONG ℄ OF RELOCATED U.S. 20

℄ PROFILE

CURVE DATA
LEFT EDGE PAVEMENT
P.C. = STA. 22+32.19 (14' Lt.)
Δ = 27°37'44"
D = 14°56'23"
R = 383.51'
T = 94.30'
L = 184.94'

CURVE DATA
RIGHT EDGE OF PAVEMENT
PC = STA. 22+74.72 (15.61 Rt.)
Δ = 31°14'46"
D = 17°00'00"
R = 337.03'
T = 94.25
L = 183.80

CURVE DATA ℄ U.S. 20 ①
PI = STA 17+28.57
Δ = 08°07'57"
D = 03°40'00"
R = 1562.61'
T = 111.08'
L = 221.80'

CURVE DATA ℄ U.S. 20 ②
PI = STA 25+65.30
Δ = 80°46'57"
D = 15°00'00"
R = 381.97'
T = 324.98'
L = 538.55'

FOUNDATION DATA:

THE WEST ABUTMENT SHALL BE FOUNDED ON HP12×53 STEEL BEARING PILES HAVING AN ESTIMATED PAY LENGTH OF 35 FEET PER PILE.

PIER 1 SHALL BE FOUNDED ON A SPREAD FOOTING FOUNDED ON SHALE BEDROCK.

PIER 2 SHALL BE FOUNDED ON HP14×89 STEEL BEARING PILES HAVING AN ESTIMATED PAY LENGTH OF 20 FEET PER PILE.

THE EAST ABUTMENT SHALL BE FOUNDED ON HP12×53 STEEL BEARING PILES HAVING AN ESTIMATED PAY LENGTH OF 40 FEET PER PILE.

WOODRUFF, INC.
CONSULTING ENGINEERS
CLEVELAND, OHIO

SITE PLAN

U.S. ROUTE 20 OVER THE GRAND RIVER

BR. NO.-LAK-20-1723 FROM STA. 18+91.00 TO STA. 22+89.56

LAKE COUNTY OHIO

MADE R.J.P.	TRACED R.C.K.	CHECKED A.J.M.	REVIEWED A.J.M.	REVISED
DATE 5-11-84	DATE 5-14-84	DATE 10/84	DATE 10/84	SHEET 2 /22

U.S. 20 OVER GRAND RIVER

MICROFILMED
MAY 0 1985

GENERAL NOTES

DESIGN SPECIFICATIONS:

THIS STRUCTURE CONFORMS TO "STANDARD SPECIFICATIONS FOR HIGHWAY BRIDGES" ADOPTED BY THE AMERICAN ASSOCIATION OF STATE HIGHWAY AND TRANSPORTATION OFFICIALS, 1977, INCLUDING THE 1978, 1979, 1980, 1981, 1982, AND 1983 INTERIM SPECIFICATIONS AND THE OHIO " SUPPLEMENT" TO THESE SPECIFICATIONS.

DESIGN LOADING:

HS20-44 Case II AND THE ALTERNATE MILTARY LOADING.

DESIGN STRESSES:

CONCRETE CLASS S - COMPRESSIVE STRENGTH 4500 P.S.I.

CONCRETE CLASS C - COMPRESSIVE STRENGTH 4000 P.S.I.

REINFORCING STEEL - ASTM A615, A616, A617- GRADE 60 MINIMUM YIELD STRENGTH 60,000 P.S.I.

STRUCTURAL STEEL - ASTM A572 - YIELD STRENGTH 50,000 P.S.I.

DECK PROTECTION METHOD:

EPOXY COATED REINFORCING STEEL, TOP AND BOTTOM MATS.

MONOLITHIC WEARING SURFACE IS ASSUMED, FOR DESIGN PURPOSES, TO BE 1" THICK.

REMOVAL OF EXISTING STRUCTURE:

* ABUTMENTS SHALL BE REMOVED TO 1'-0" BELOW EXISTING OR FINAL GRADE PIERS SHALL BE REMOVED TO ELEVATION 577'. IN ADDITION, THERE ARE TWO (2) SETS OF FOUR (4) CONCRETE PYLONS IN THE RIVERBED SOUTH OF THE EXISTING STRUCTURE. THESE PYLONS SHALL BE REMOVED TO ELEVATION 577'. PAYMENT WILL BE MADE AT THE LUMP SUM PRICE BID FOR ODOT ITEM 202, STRUCTURES REMOVED, AS PER PLAN.

PILE POINTS:

STEEL PILE POINTS SHALL BE USED TO PROTECT THE TIPS OF THE PROPOSED PILING. THE STEEL POINTS SHALL BE FURNISHED BY THE ASSOCIATED PILE AND FITTING CORPORATION, 262 RUTHERFORD BOULEVARD, CLIFTON, NEW JERSEY 07014; THE INTERNATIONAL CONSTRUCTION EQUIPMENT, INC., 301 WAREHOUSE DRIVE, MATTHEWS, NORTH CAROLINA 28015; DOUGHERTY FOUNDATION PRODUCTS, INC., P.O. BOX 688, FRANKLIN LAKES, NEW JERSEY 07417 OR BY A MANUFACTURER THAT CAN FURNISH A STEEL POINT THAT IS ACCEPTABLE TO THE DIRECTOR.

PILE DRIVING CONSTRAINTS:

PRIOR TO DRIVING PILES AT THE WEST ABUTMENT, THE SPILL THROUGH SLOPE EMBANKMENT AT THE WEST ABUTMENT SHALL BE CONSTRUCTED TO THE LEVEL OF THE SUBGRADE FOR A MINIMUM DISTANCE OF 200 FEET BACK OF THE WEST ABUTMENT. SEE SHEET 8/86 OF THE GENERAL NOTES CONCERNING THE SPECIAL EMBANKMENT CONSTRUCTION REQUIRED FOR THE WEST APPROACH TO THE BRIDGE. EXCAVATION FOR THE WEST ABUTMENT FOOTING MAY BE MADE AND PILES DRIVEN, AFTER THE REQUIREMENTS ARE MET.

* SEE NOTE IN "WATERWORK" REGARDING REMOVAL OF EXISTING WATER MAIN ON STRUCTURE.

PREBORED HOLES:

IF THE CONTRACTOR HAS DEMONSTRATED A REASONABLE EFFORT TO INSTALL THE REAR ABUTMENT PILES TO BEDROCK AND HAS FOUND THAT AN EXCESSIVE BLOW COUNT IS REACHED PRIOR TO THE PILES PENETRATING TO BEDROCK, THE PROJECT ENGINEER MAY PERMIT THE CONTRACTOR TO USE PREBORED HOLES AS NECESSARY TO INSTALL THE PROPOSED PILES TO REFUSAL ON BEDROCK.

PILES:

PILES SHALL BE DRIVEN TO REFUSAL ON BEDROCK. REFUSAL SHALL BE CONSIDERED AS ATTAINED BY PENETRATING SOFT BEDROCK WITH A MINIMUM RESISTANCE OF 20 BLOWS PER INCH, OR REFUSAL SHALL BE CONSIDERED AS ATTAINED AFTER THE PILE HAS CONTACTED HARD BEDROCK AND THE PILE HAS THEN RECEIVED AT LEAST 20 BLOWS.

THE DESIGN LOAD IS 55 TONS PER PILE FOR THE ABUTMENT PILES AND 55 TONS PER PILE FOR THE PIER PILES.

FOUNDATION BEARING PRESSURE:

PIER 1 FOOTING, AS DESIGNED, PRODUCES A MAXIMUM BEARING PRESSURE OF 5.76 TONS PER SQUARE FOOT.

FOOTING-PIER 1

PIER 1 FOOTING SHALL BE PLACED IN BEDROCK AT THE ELEVATION SHOWN.

UTILITY LINES:

ALL EXPENSE INVOLVED IN RELOCATING THE AFFECTED UTILITY LINES SHALL BE BORNE BY OWNERS. THE CONTRACTOR AND OWNERS ARE REQUESTED TO COOPERATE BY ARRANGING THEIR WORK IN SUCH A MANNER THAT INCONVENIENCE TO EITHER WILL BE HELD TO A MINIMUM.

INSTALLATION OF SEAL:

DURING INSTALLATION OF THE SUPPORT/ARMOR FOR THE SUPERSTRUCTURE SIDE OF THE EXPANSION JOINT SEAL, THE SEATING OF BEAMS ON BEARINGS SHALL BE CAREFULLY OBSERVED TO ASSURE THAT POSITIVE BEARING IS MAINTAINED. PROPER VERTICAL FIT OF THE SUPPORT/ARMOR ON THE BEAMS SHALL BE ACHIEVED BY POSITIONING OF THE BEVEL FILL PLATES RATHER THAN BY CLAMPING FORCE.

PILE HAMMER:

THE PILE HAMMER USED TO INSTALL THE STEEL "H" BEARING PILES SHALL HAVE A STATE'S ENERGY RATING OF NOT LESS THAN 15,000 FOOT-POUNDS. THIS REQUIREMENT DOES NOT RELIEVE THE CONTRACTOR FROM 108.05 WHICH STATES THAT THE CONTRACTOR IS TO PROVIDE SUFFICIENT EQUIPMENT FOR PROSECUTING THE REQUIRED WORK. REFER TO ODOT'S "MANUAL OF PROCEDURES FOR STRUCTURES" TO OBTAIN THE STATE"S ENERGY RATING.

ITEM SPECIAL- SEALING OF CONCRETE SURFACES

A SEALER SHALL BE APPLIED TO THE EXPOSED CONCRETE SURFACES OF THE BRIDGE AS LISTED BELOW. SEE THE PROPOSAL FOR SEALER MATERIAL AND SURFACE PREPARATION REQUIREMENTS AND APPLICATION RATES AND PROCEDURES.

1) CURBS, SIDEWALKS AND PARAPETS (ALL FACES)
2) DECK EDGES AND THE UNDERSIDE EXTENDING BEYOND THE EXTERIOR BEAMS.
3) PIER CAPS AND STEMS
4) ABUTMENTS INCLUDING BACKWALLS AND WINGWALLS.

REFERENCE SHALL BE MADE TO STANDARD DRAWINGS:

AS-1-81	DATED	11-27-81
BR-2-82	DATED	11-1-82
RB-1-55	REVISED	2-2-59
SD-1-69	DATED	6-12-69
EXJ-2-81	REVISED	4-2-84

AND TO SUPPLEMENTAL SPECIFICATIONS:

824	DATED	10-8-82
849	DATED	10-19-81

WOODRUFF, INC.
CONSULTING ENGINEERS
CLEVELAND, OHIO

GENERAL NOTES

U.S. ROUTE 20 OVER
THE GRAND RIVER

BR. NO.-LAK-20-1723 FROM STA. 18+91.00
TO STA. 22+89.56

LAKE COUNTY OHIO

MADE AJM	TRACED M.A.C.	CHECKED P.G.	REVIEWED	REVISED 9-3-86
DATE 10/84	DATE 10-84	DATE 10-84	DATE 10/84	SHEET 3/22

U.S. 20 OVER GRAND RIVER

GENERAL NOTES

~~ITEM 511 - CLASS S CONCRETE, SUPERSTRUCTURE, AS PER PLAN~~

ITEM 511 - CLASS C CONCRETE, ABUTMENT ABOVE FOOTING, AS PER PLAN

IN LIEU OF THE PROPORTIONING SPECIFIED IN 499.03 AND 511.02, THE FOLLOWING TABLE SHALL BE USED TO ESTABLISH THE QUANTITIES PER CUBIC YARD FOR CONCRETE FOR THE SUPERSTRUCTURE AND IN THE ABUTMENT BACKWALLS ABOVE THE APPROACH SLAB SEATS. THE COARSE AGGREGATE SHALL BE LIMESTONE OR SLAG.

QUANTITIES PER CUBIC YARD - SPECIAL CONCRETE (USING NO. 57 LINESTONE)

	FINE AGGREGATE (LB.)	COARSE AGGREGATE (LBS)	TOTAL (LB.)
CLASS S	1270	1555	2825
CLASS C	1435	1595	3030

	CEMENT CONTENT (LB)	MAXIMUM WATER CEMENT RATIO
CLASS S	715	0.35
CLASS C	600	0.35

VOID

AIR CONTENT - 8±2%

HIGH RANGE WATER REDUCER SHALL BE USED. HIGH RANGE WATER REDUCER SHALL CONFORM TO 705.12, ASTM-C494 TYPE F AND SHALL NOT CONTAIN CALCIUM CHLORIDE. THE DOSAGE RATE WILL BE DETERMINED BY THE CONTRACTOR BASED ON MANUFACTURER'S RECOMMENDATION TO ACHIEVE THE DESIRED WORKABILITY LEVEL.

THE CEMENT CONTENT SHALL BE MAINTAINED AND A MAXIMUM WATER-CEMENT RATIO OF 0.35 SHALL NOT BE EXCEEDED. THE CONTRACTOR MAY ADD A PORTION OF THE SUPERPLASTICIZER AT THE PLANT TO ACHIEVE A MAXIMUM SLUMP OF 4 INCHES. THE REMAINING SUPERPLASTICIZING ADMIXTURE SHALL BE ADDED AT THE JOB SITE AND MIXED A MINIMUM OF FIVE (5) MINUTES AFTER THE SUPERPLASTICIZER HAS BEEN ADDED. THE SLUMP SHALL BE 6±1 INCHES. THE CONTRACTOR SHALL FURNISH A VOLUMETRIC DISPENSER FOR THE SUPERPLASTICIZER.

SAMPLING AND TESTING FOR ENTRAINED AIR CONTENT AND SLUMP SHOULD BE TAKEN FROM THE CONCRETE THAT HAS BEEN TREATED WITH A HIGH RANGE WATER REDUCER.

IN NO CASE SHALL TRANSPORTATION OF THE CONCRETE BE IN NON-AGITATING VEHICLES. IF SLUMP LOSS OCCURS BEFORE PLACEMENT OF THE CONCRETE THE CHARGE MAY BE "RETEMPERED" WITH SUPERPLASTICIZER TO RESTORE PLASTICITY. THE SLUMP RANGE AND AIR CONTENT SHALL BE RECHECKED TO INSURE CONFORMANCE WITHIN ALLOWANCE LIMITS. IF THE CONSISTENCY OF THE CHARGE AFTER RETEMPERING IS SUCH AS TO CAUSE SEGREGATION OF THE COMPONENTS, THIS WILL BE CAUSE FOR REJECTION OF THE LOAD.

CURING OF ALL AREAS SHALL BE AS PER 511.14, METHOD (A) USING CONTINUOUS APPLICATION OF WATER AND NO PLASTIC SHEETING.

ITEM 516 - MODULAR EXPANSION JOINTS INCLUDING ELASTOMERIC COMPRESSION SEALS AND STEEL EXTRUSIONS.

THIS WORK SHALL INCLUDE THE PREPARATION OF DESIGN SHOP DRAWINGS, FABRICATION, FURNISHING AND INSTALLATION OF A MODULAR ELASTOMERIC EXPANSION JOINT SYSTEM FOR SEALING MOVEMENT JOINTS IN THE BRIDGE DECK IN ACCORDANCE WITH THE PLANS AND SPECIFICATIONS. THE FINISHED JOINT SHALL BE IN CONFORMITY WITH THE LINES AND GRADES SHOWN ON THE PLANS. THE EXPANSION JOINT SHALL CONSIST OF AN INTEGRALLY MOLDED CONTINUOUS PREFORMED UNIT OF NEOPRENE CONTAINED IN AN INTEGRALLY EXTRUDED METAL FRAME.

PREFORMED ELASTOMERIC SEAL SHALL BE AN EXTRUDED POLYMERIZED CHLOROPRENE MATERIAL MEETING THE REQUIREMENTS OF ASTM D-2628. THE SEAL SHALL BE CONTINUOUS AND SHALL HAVE LOCKING LUGS AND/OR BE SUCH THAT IT WILL INTERLOCK WITH THE EXTRUDED METAL FRAME.

ALL MATERIAL UNDER THIS ITEM SHALL MEET THE FOLLOWING REQUIREMENTS:

1. STRUCTURAL STEEL EXTRUSIONS, PLATES AND SHAPES - ASTM A-36 OR A-588.
2. STAINLESS STEEL NUTS, BOLTS AND WASHERS - ASTM -276, TYPE 304.

ALL SHOP FABRICATION OF EXPANSION JOINTS SHALL BE MADE BY AN ESTABLISHED MANUFACTURER OF THESE PRODUCTS, WATSON BOWMAN AND ACME COMPANY, D.S. BOWN COMPANY, OR AN APPROVED ALTERNATE.

THE MANUFACTURER MUST PREPARE AND OBTAIN APPROVAL OF COMPLETE DESIGN DRAWINGS FOR INCLUSION INTO THIS SET OF PLANS FOR THE EAST END OF THE BRIDGE DECK BEFORE PREPARING AND SUBMITTING SHOP DRAWINGS FOR APPROVAL. ALL APPROVED DESIGN DRAWINGS OF JOINTS MUST BE FURNISHED IN ACCEPTABLE FORM FOR INCLUSION WITH THIS SET OF PLANS.

SYSTEM A FIELD PAINT ON EXPOSED STEEL SURFACES. FIELD PAINT SHALL CONSIST OF ONE PRIME COAT AND ONE FINISH COAT.

MEASUREMENT FOR PAY PURPOSES SHALL BE BASED ON THE ACTUAL SEALED LENGTH OF JOINT MEASURED HORIZONTALLY ALONG THE JOINT CENTERLINE.

PAYMENT PER LINEAR FEET FOR ITEM 516 - MODULAR EXPANSION JOINTS INCLUDING ELASTOMERIC COMPRESSION SEALS AND STEEL EXTRUSIONS INCLUDES THE FURNISHING OF DESIGN AND SHOP DRAWINGS, ALL LABOR, MATERIAL, JOINT ARMOR, REINFORCING, PLATES, ANCHORING DEVICES, AND EQUIPMENT NECESSARY TO FABRICATE, FURNISH AND INSTALL THE COMPLETE MODULAR ELASTOMERIC EXPANSION JOINT SYSTEM.

F.H.W.A. REGION	STATE	PROJECT	
5	OHIO		

LAKE COUNTY
LAK-20-17.14

52
86

ESTIMATED QUANTITIES

ITEM	TOTAL	UNIT	DESCRIPTION	ABUT-MENTS	PIERS	SUPER STRUC	GEN ERAL
202	Lump		Structures Removed, As per plan				Lump
503	Lump		Cofferdams, Cribs and Sheeting				Lump
503	517	Cubic Yds.	Unclassified Excavation	517			
503	266	Cubic Yds.	Unclassified Excavation Including Rock		266		
503	58	Cubic Yds.	Shale Excavation		58		
505	Lump		Pile Driving Equipment Mobilization				Lump
507	1,505	Lin. Ft.	Steel Piles, HP 12 x 53, As per plan	1,505			
507	720	Lin. Ft.	Steel Piles, HP 14 x 89, As per plan		720		
507	285	Lin. Ft.	Prebored Holes, As per plan	285			
507	57	Each	Steel Points	21	36		
509	68,196	Lb.	Reinforcing Steel, Grade 60	12,365	55,831		
511	296	Cubic Yds.	Class C Concrete, Piers Above Footings		296		
511	151	Cubic Yds.	Class C Concrete, Abut. Above Footings	151			
511	245	Cubic Yds.	Class C Concrete, Footings	93	152		
511	652	Cubic Yds.	Class S Concrete, Superstructure, as per plan. See Prep note.	7		645	
513	509,100	Lb.	Structural Steel (AISC Category III), A572			509,100	
513	3,645	Each	Welded Stud Shear Connectors			3,645	
514	509,100	Lb.	Field Painting of New Structural Steel, SYSTEM A, APP			509,100	
516	40.44	Lin. Ft.	Structural Expansion Joint Including Elastomeric			40.44	
			Compression Seals				
516	43.19	Lin. Ft.	Modular Expansion Joint Including Elastomeric			43.19	
			Compression Seals & Steel Extrusions				
517	883	Lin. Ft.	Railings (Concrete Parapet With Double Pipe Rail)	93		790	
518	104	Cubic Yds.	Porous Backfill	104			
518	74	Lin. Ft.	6" Perforated Helical Corrugated Steel	74			
			Pipe, 707.01				
518	42	Lin. Ft.	6" Nonperforated Helical Corrugated Steel	42			
			Pipe Including Specials, 707.01				
601	349	Cubic Yds.	Dumped Rock Fill, Type "D"	349			
601	919	Cubic Yds.	Grouted Rock Channel Protection, Type "A", as per plan	919			
824	129,475	Lb.	Epoxy Coated Reinforcing Steel, Grade 60	7,762		121,713	
* 511	652	Cubic Yds.	Class "CS" Concrete, Superstructure. See proposal note.	7		645	
* 511	652	Cubic Yds.	Class "S" Concrete, Superstructure - using				
			shrinkage compensating cement. See prop. note	7		645	
Special	1113	Sq. Yd.	Sealing of Concrete Surfaces (See Proposal Note)	72	593	448	

* Alternate Bid Items

ITEM 514 - FIELD PAINTING OF NEW STRUCTURAL STEEL, SYSTEM A, A.P.P.
MATERIALS USED FOR THIS ITEM SHALL BE MANUFACTURED BY THE COMPANY WHICH MANUFACTURED THE SHOP PRIME COAT SO THAT COMPATIBILITY OF COATS IS INSURED.

Item 601 - Grouted Rock Channel Protection, Type A, as per plan.
Fabric filter shall be used.

QUANTITY CALCULATIONS
BY R.C.K. DATE 10-4-84
CHKD. R.J.P. DATE 10-18-84
WOODRUFF, INC.

WOODRUFF, INC.
CONSULTING ENGINEERS
CLEVELAND, OHIO

ESTIMATED QUANTITIES

U.S. ROUTE 20 OVER THE GRAND RIVER

BR. NO.-LAK-20-1723 FROM STA. 18+91.00 TO STA. 22+89.56

LAKE COUNTY OHIO

MADE R.C.K.	TRACED MAG	CHECKED R.J.P.	REVIEWED RJM	REVISED 9-3-86
DATE 10-84	DATE 10-84	DATE 10-84	DATE 10/86	SHEET 5 / 22

U.S. 20 OVER GRAND RIVER

F.H.W.A. REGION	STATE	PROJECT	
5	OHIO		

LAKE COUNTY
LAK-20-17.14

53
86

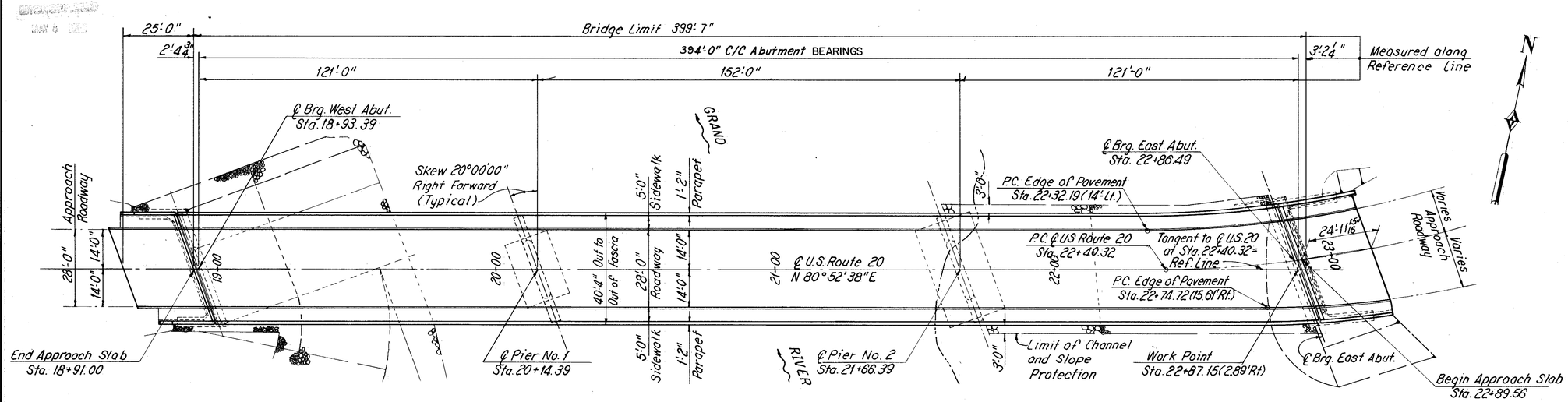

GENERAL PLAN

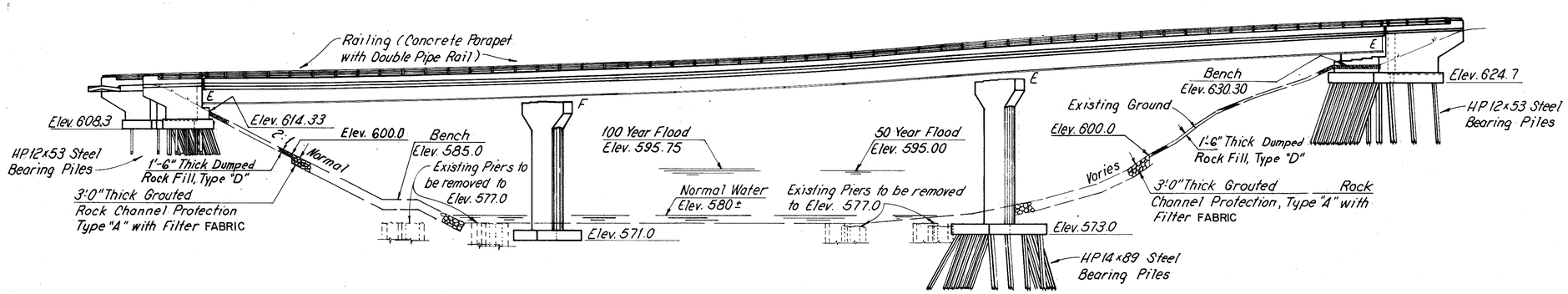

ELEVATION

WOODRUFF, INC.
CONSULTING ENGINEERS
CLEVELAND, OHIO

GENERAL PLAN AND ELEVATION
U.S. ROUTE 20 OVER THE GRAND RIVER

BR. NO. LAK-20-1723 FROM STA. 18+91.00 TO STA. 22+89.56

LAKE COUNTY OHIO

MADE R.C.K.	TRACED R.C.K.	CHECKED J.S.	REVIEWED	REVISED
DATE 5-22-85	DATE 5-22-85	DATE 5-8-5	DATE	SHEET 6 / 22

U.S. 20 OVER GRAND RIVER

53

F.H.W.A. REGION	STATE	PROJECT	
5	OHIO		

54 / 86

LAKE COUNTY
LAK-20-17.14

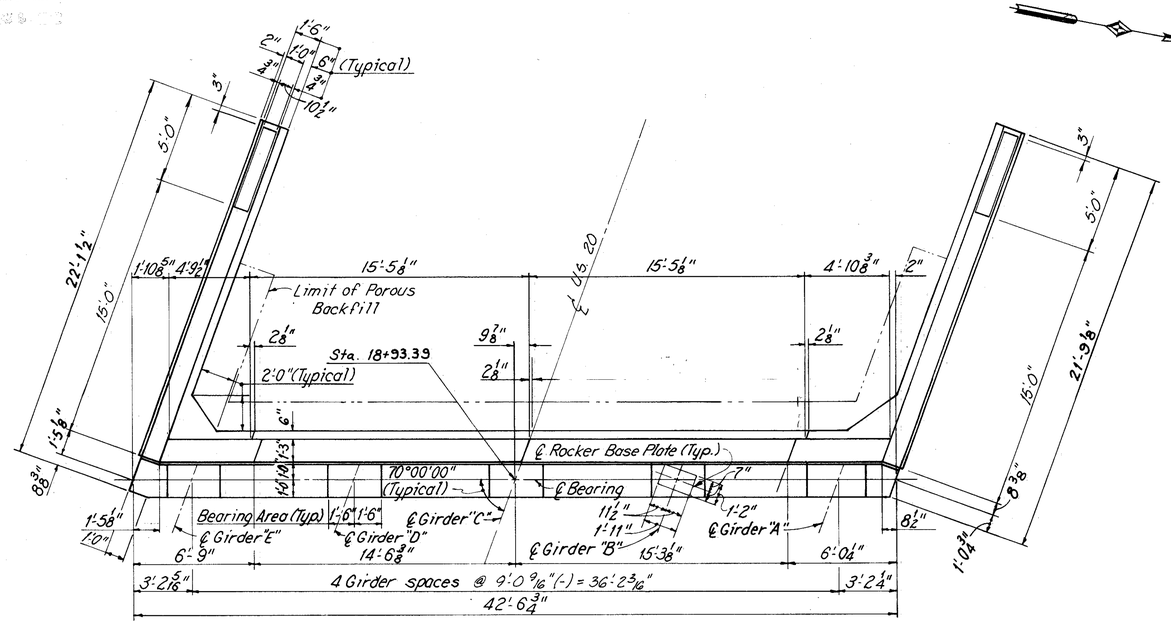

PLAN

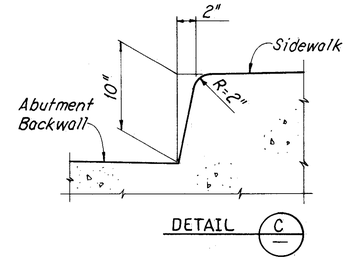

DETAIL C

NOTES

FOR FOUNDATION PLAN AND WINGWALL ELEVATIONS SEE SHEET 8/22

FOR WINGWALL DETAILS SEE SHEET 8/22

FOR ADDITIONAL NOTES SEE SHEET 8/22

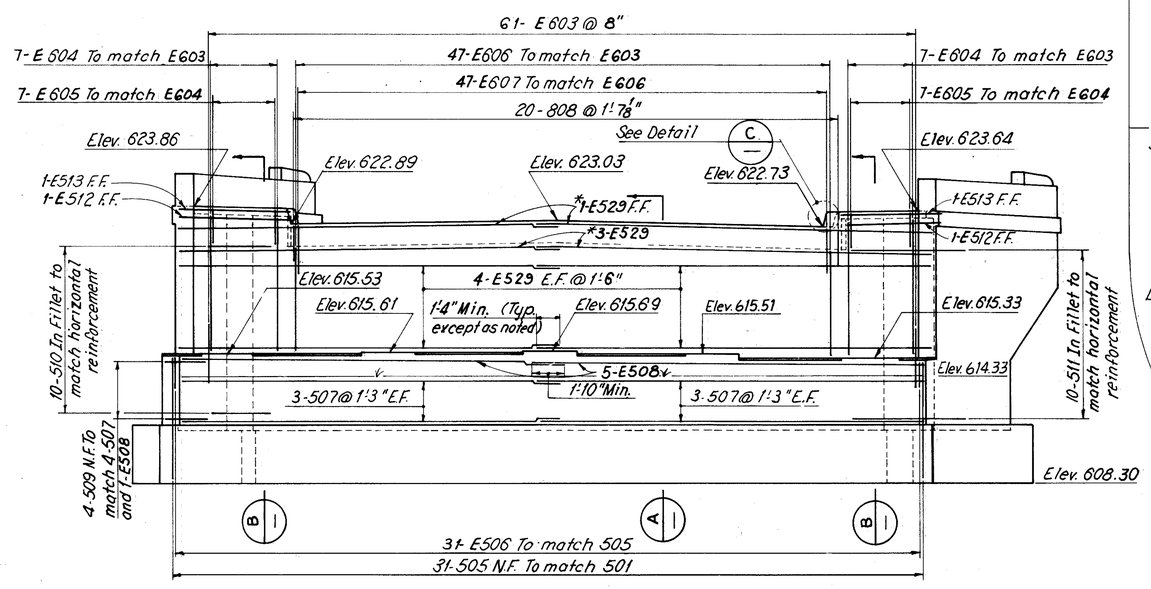

ELEVATION
(Piles not shown)
* Field bend as required

Note:
All bar marks shall be prefixed AW.
Reinforcing at Waterline opening shall be field cut as required.

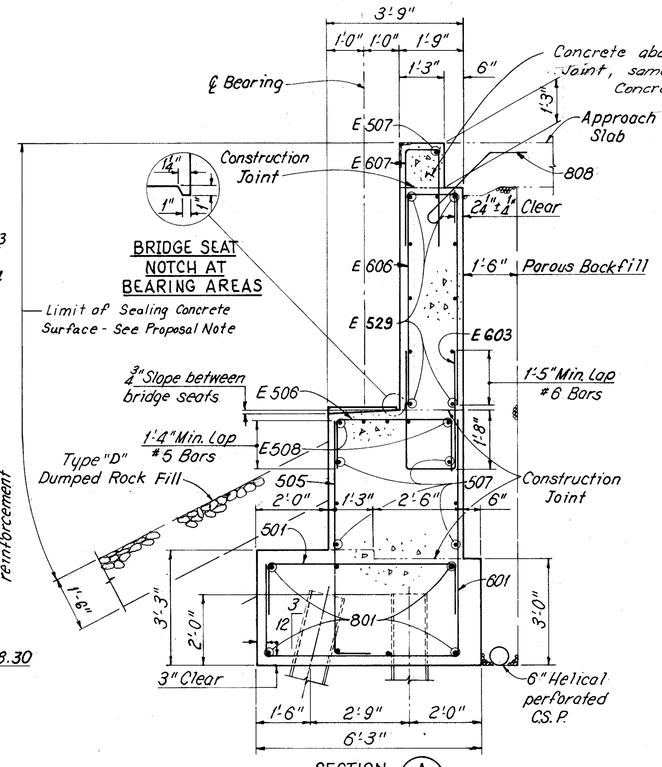

SECTION A

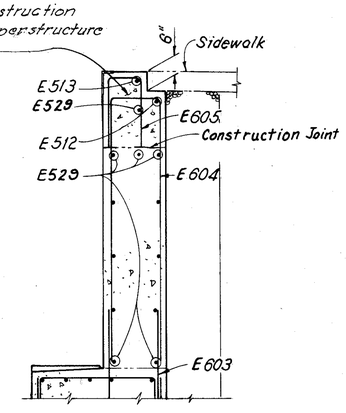

PART SECTION B

WOODRUFF, INC.
CONSULTING ENGINEERS
CLEVELAND, OHIO

WEST ABUTMENT

U.S. ROUTE 20 OVER THE GRAND RIVER

BR. NO.-LAK-20-1723 FROM STA. 18+91.00 TO STA. 22+89.56

LAKE COUNTY OHIO

MADE R.C.K.	TRACED R.C.K.	CHECKED P.G.	REVIEWED A.J.M.	REVISED 9-3-86
DATE 7-17-84	DATE 8-13-84	DATE 10-84	DATE 10/1/84	SHEET 7 / 22

U.S. 20 OVER GRAND RIVER

54

LAKE COUNTY
LAK-20-17.14

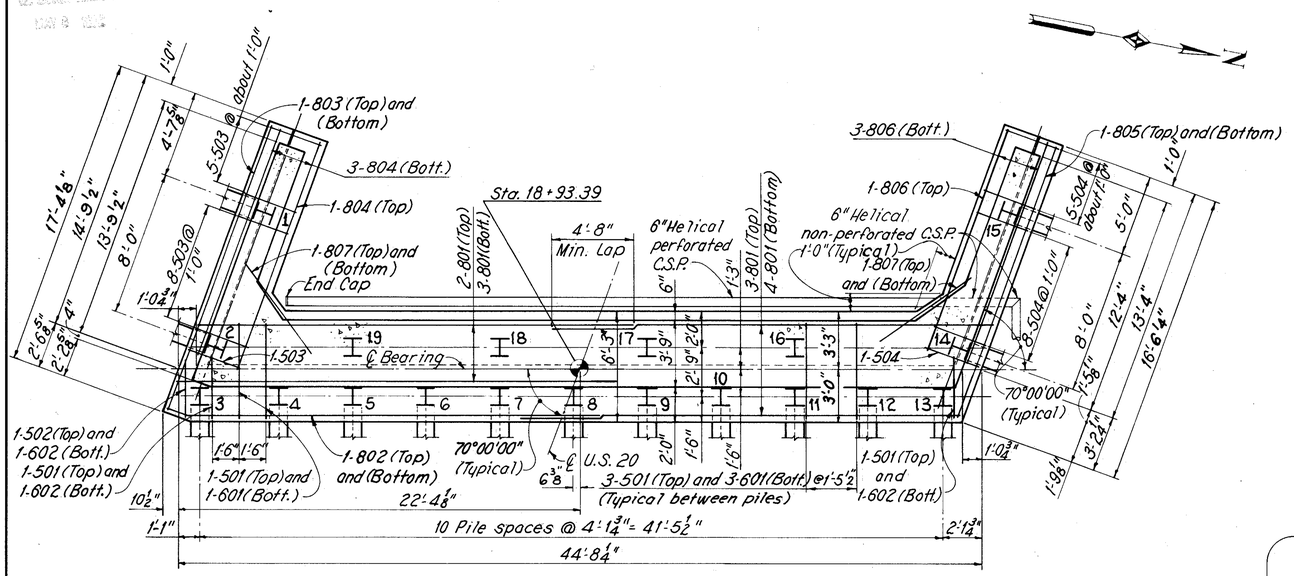

FOOTING PLAN

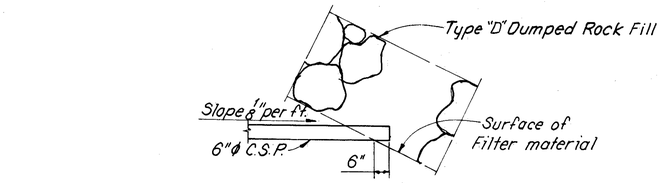

TERMINATION OF 6" ϕ C.S.P AT THE FRONT SLOPE

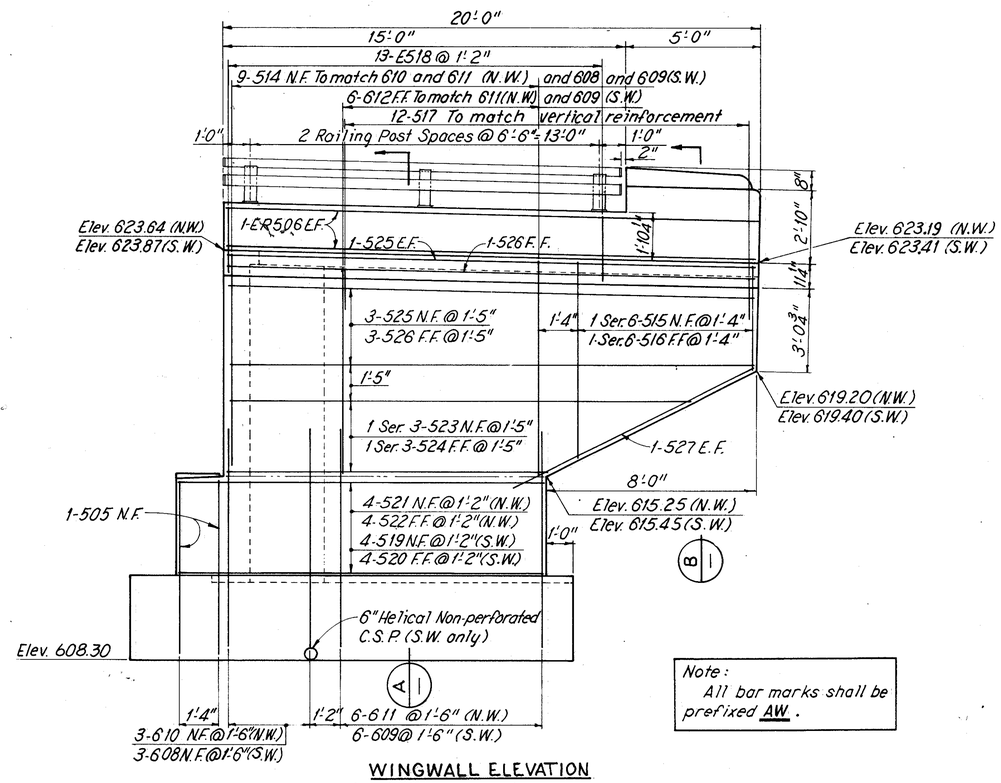

WINGWALL ELEVATION
(N.W.)-Northwest Wingwall shown
(S.W.)-Southwest Wingwall opposite hand

Note:
All bar marks shall be prefixed AW.

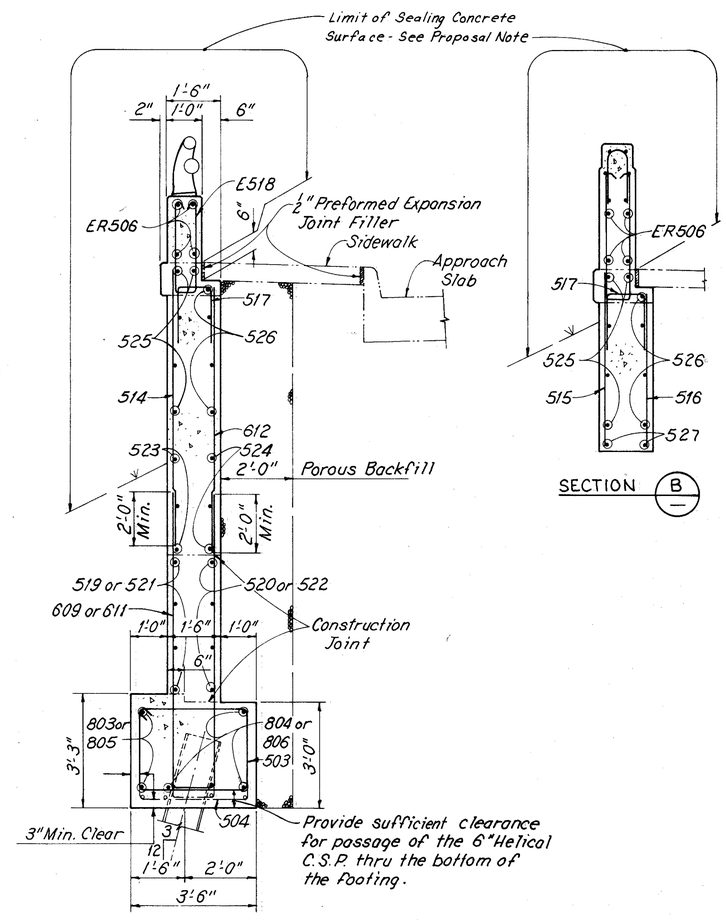

SECTION A

SECTION B

NOTES

FOR EXPANSION JOINT DETAILS SEE SHEET 16/22

FOR REINFORCEMENT SCHEDULE AND BAR BENDING DIAGRAMS SEE SHEET 19/22 THRU 20/22

ALL REINFORCING STEEL BAR MARKS PREFIXED "E" SHALL BE EPOXY COATED.

IN ADDITION TO THE PROVISIONS OF 511.08, BACKWALL CONCRETE ABOVE THE CONSTRUCTION JOINT AT THE APPROACH SLAB SEAT SHALL NOT BE PLACED UNTIL AFTER THE EXPANSION JOINT IS IN PLACE.

THE FOLLOWING ABBREVIATIONS ARE USED:

N.F. = NEAR FACE
F.F. = FAR FACE
E.F. = EACH FACE
CSP = CORRUGATED STEEL PIPE

FOR END POST DETAILS AND REINFORCING SEE STD. DRAWING BR-2-82

POROUS BACKFILL, FULL LENGTH OF ABUTMENT AND WINGS, SHALL EXTEND UP TO THE PLANE OF THE SUBGRADE WITHIN THE ROADWAY AREA EXTENDED LATERALLY TO THE WING WALLS, 1.5 FT. THICK AT THE ABUTMENT AND 2.0 FT. THICK AT THE WINGS.

WOODRUFF, INC.
CONSULTING ENGINEERS
CLEVELAND, OHIO

WEST ABUTMENT FOOTING PLAN AND WINGWALL ELEVATION
U.S. ROUTE 20 OVER THE GRAND RIVER

BR. NO.-LAK-20-1723 FROM STA. 18+91.00 TO STA. 22+89.56.

LAKE COUNTY OHIO

MADE R.C.K.	TRACED R.C.K.	CHECKED P.G.	REVIEWED A.J.M.	REVISED
DATE 8-84	DATE 8-84	DATE 10-84	DATE 10/84	SHEET 8 / 22

U.S. 20 OVER GRAND RIVER

F.H.W.A. REGION	STATE	PROJECT	
5	OHIO		

56
86

LAKE COUNTY
LAK-20-17.14

NOTES

FOR FOUNDATION PLAN AND WINGWALL ELEVATIONS SEE SHEET 10/22

FOR WINGWALL DETAILS SEE SHEET 10/22

FOR ADDITIONAL NOTES SEE SHEET 8/22

FOR DETAIL C SEE SHEET 7/22

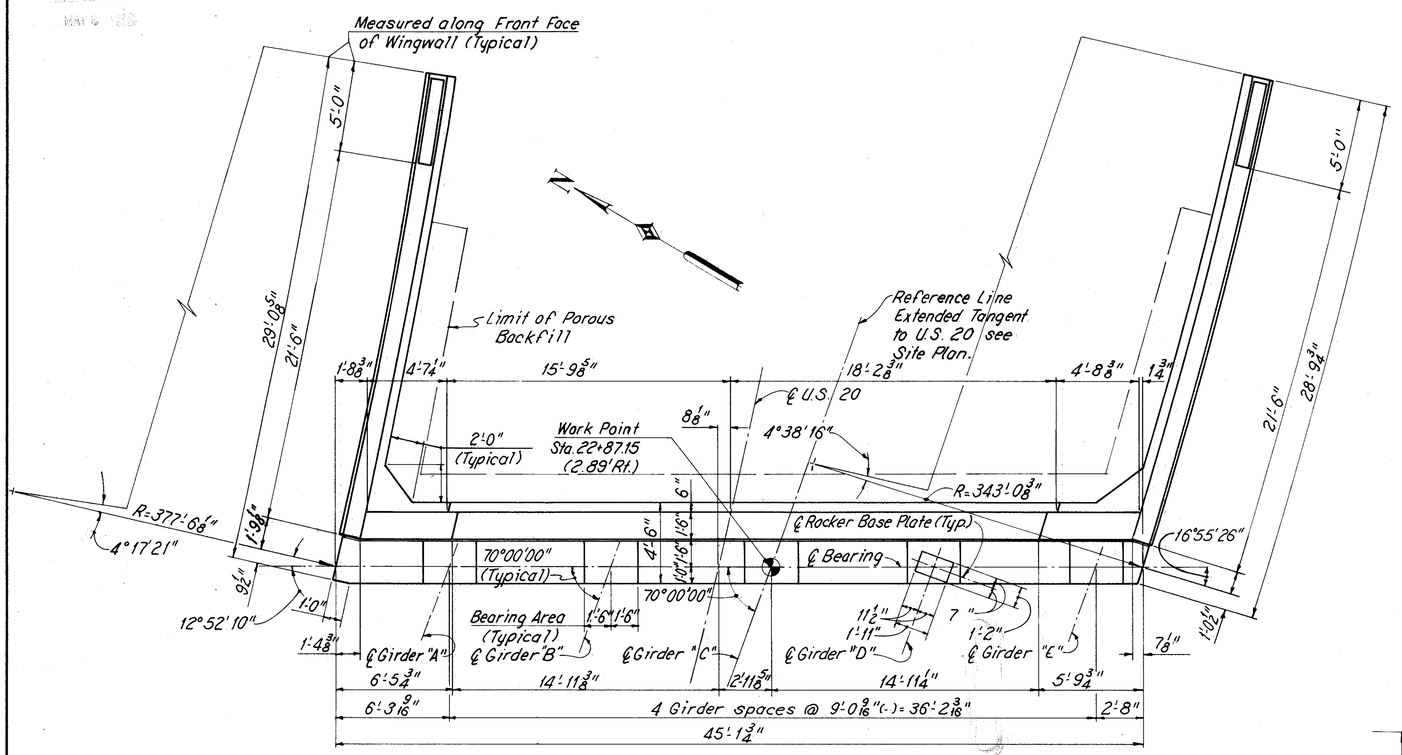

PLAN

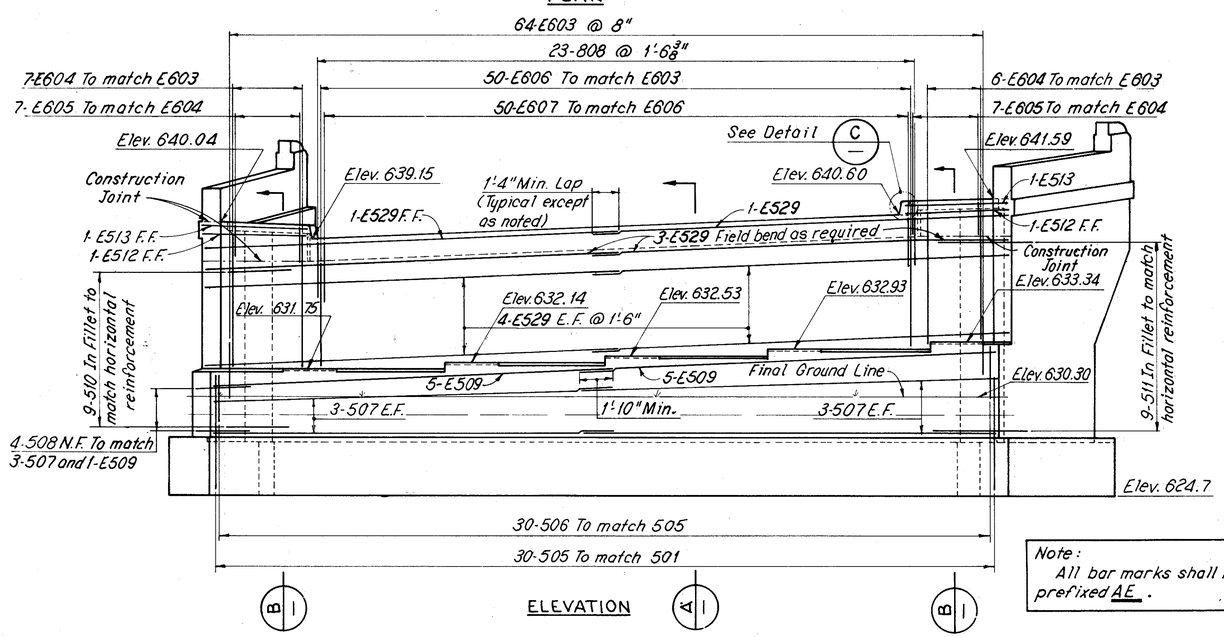

ELEVATION

Note:
All bar marks shall be prefixed AE.

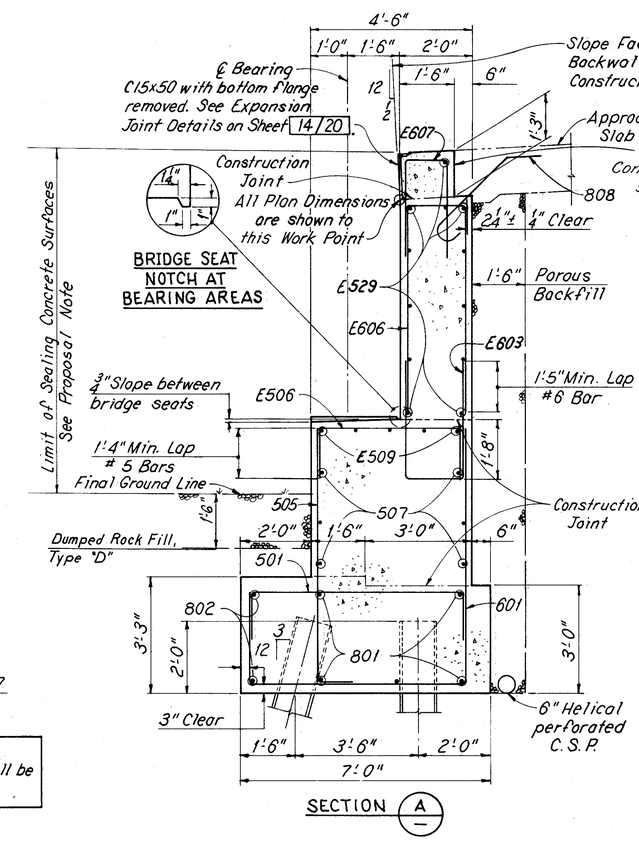

SECTION A

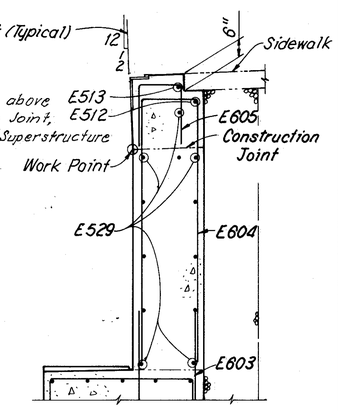

SECTION B

WOODRUFF, INC.
CONSULTING ENGINEERS
CLEVELAND, OHIO

EAST ABUTMENT

U.S. ROUTE 20 OVER THE GRAND RIVER

BR. NO.-LAK-20-1723 FROM STA. 18+91.00 TO STA. 22+89.56

LAKE COUNTY OHIO

MADE RCK PAG.	TRACED RCK	CHECKED P.G.	REVIEWED AJM	REVISED 9-3-86
DATE 9-84	DATE 9-84	DATE 10-84	DATE 10/84	SHEET 3/22

U.S. 20 OVER GRAND RIVER

F.H.W.A. REGION	STATE	PROJECT	
5	OHIO		

57
86

LAKE COUNTY
LAK-20-17.14

NOTES

FOR END POST DETAILS AND REINFORCING SEE STD. DRAWING BR-2-82

FOR ADDITIONAL NOTES SEE SHEET 8/22

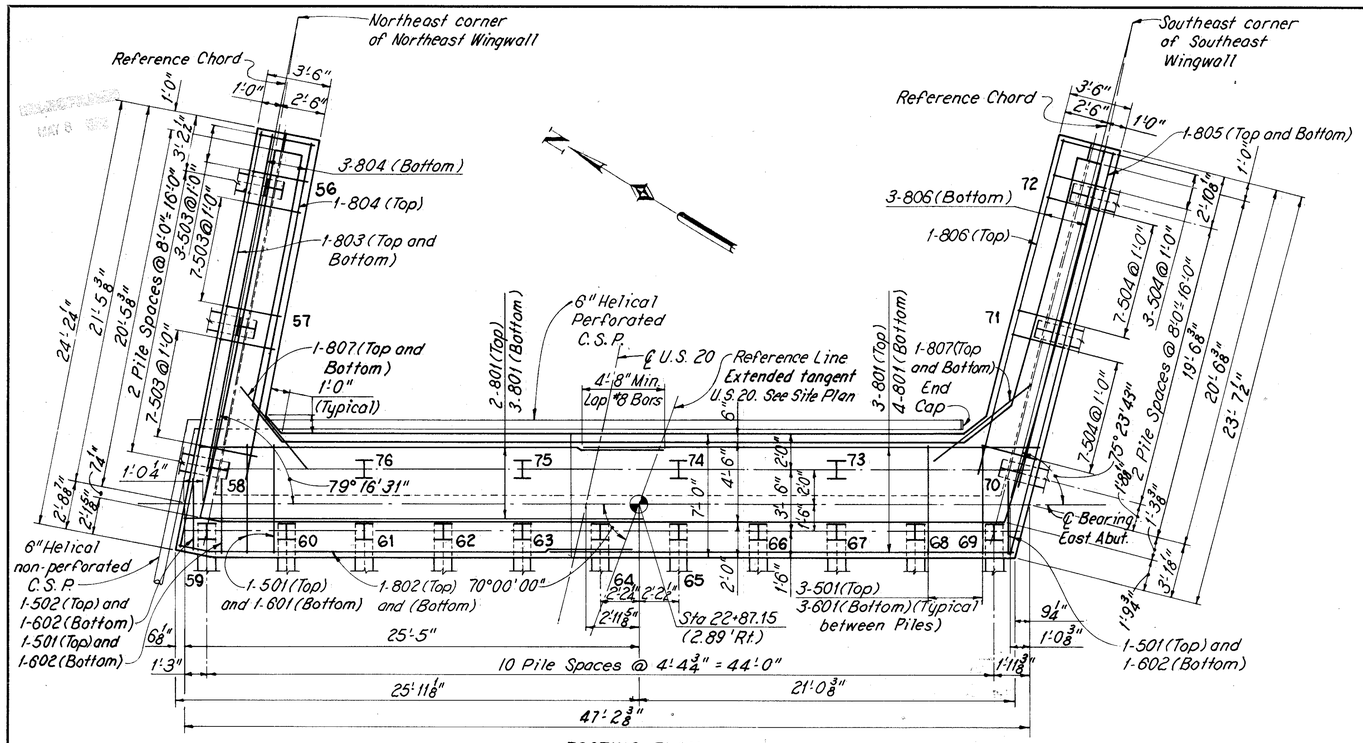

FOOTING PLAN

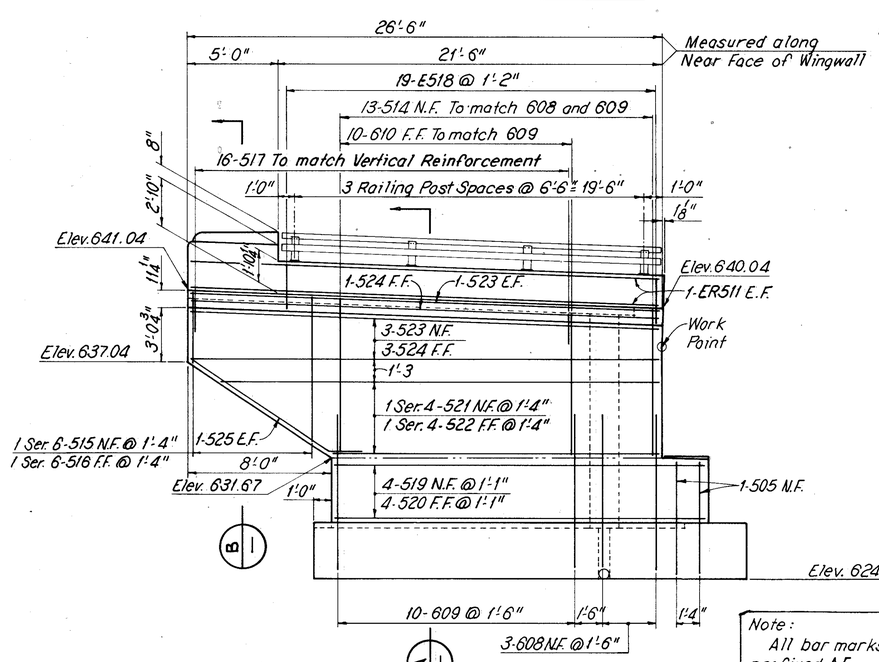

NORTHEAST WINGWALL ELEVATION

Note:
All bar marks shall be prefixed AE.

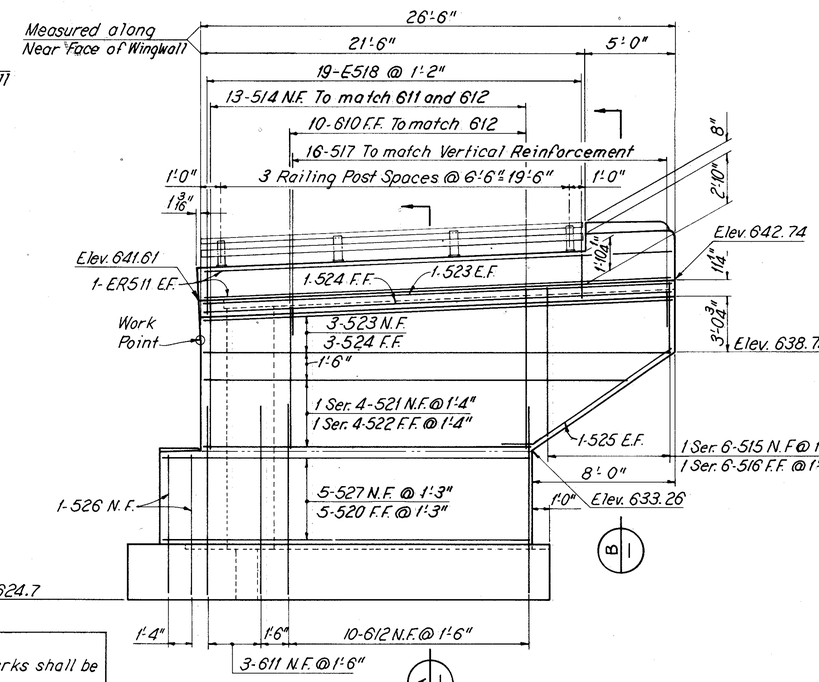

SOUTHEAST WINGWALL ELEVATION

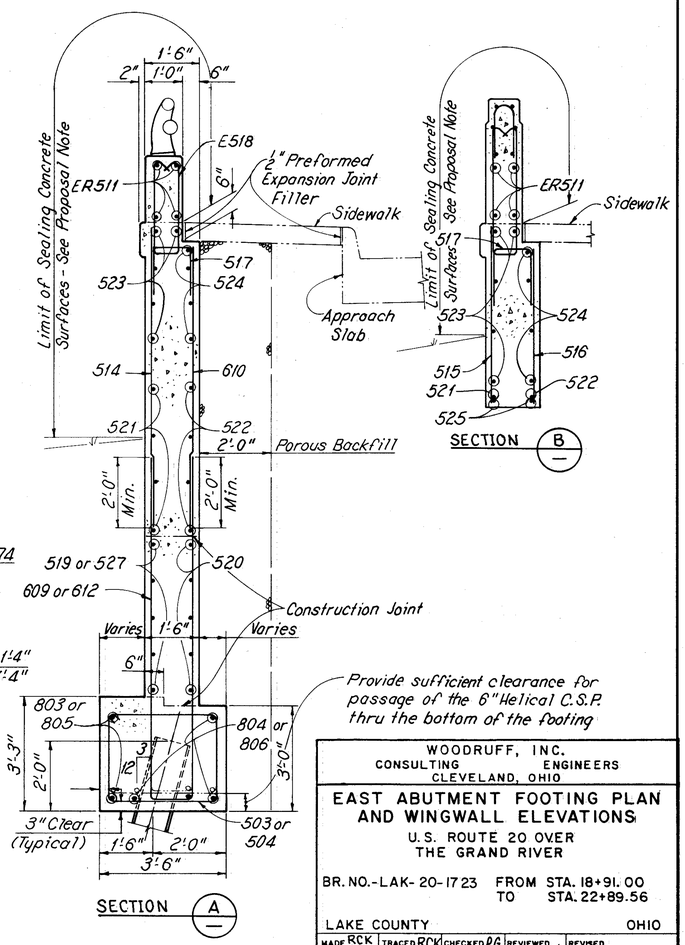

WOODRUFF, INC.
CONSULTING ENGINEERS
CLEVELAND, OHIO

EAST ABUTMENT FOOTING PLAN AND WINGWALL ELEVATIONS
U.S. ROUTE 20 OVER THE GRAND RIVER

BR. NO.-LAK-20-1723 FROM STA. 18+91.00 TO STA. 22+89.56

LAKE COUNTY OHIO

MADE RCK PAC	TRACED RCK	CHECKED P.G.	REVIEWED A.J.M.	REVISED
DATE 9-84	DATE 9-84	DATE 10-84	DATE 10/84	SHEET 10 /22

U.S.20 OVER GRAND RIVER

F.H.W.A. REGION	STATE	PROJECT	
5	OHIO		

58 / 86

LAKE COUNTY
LAK-20-17.14

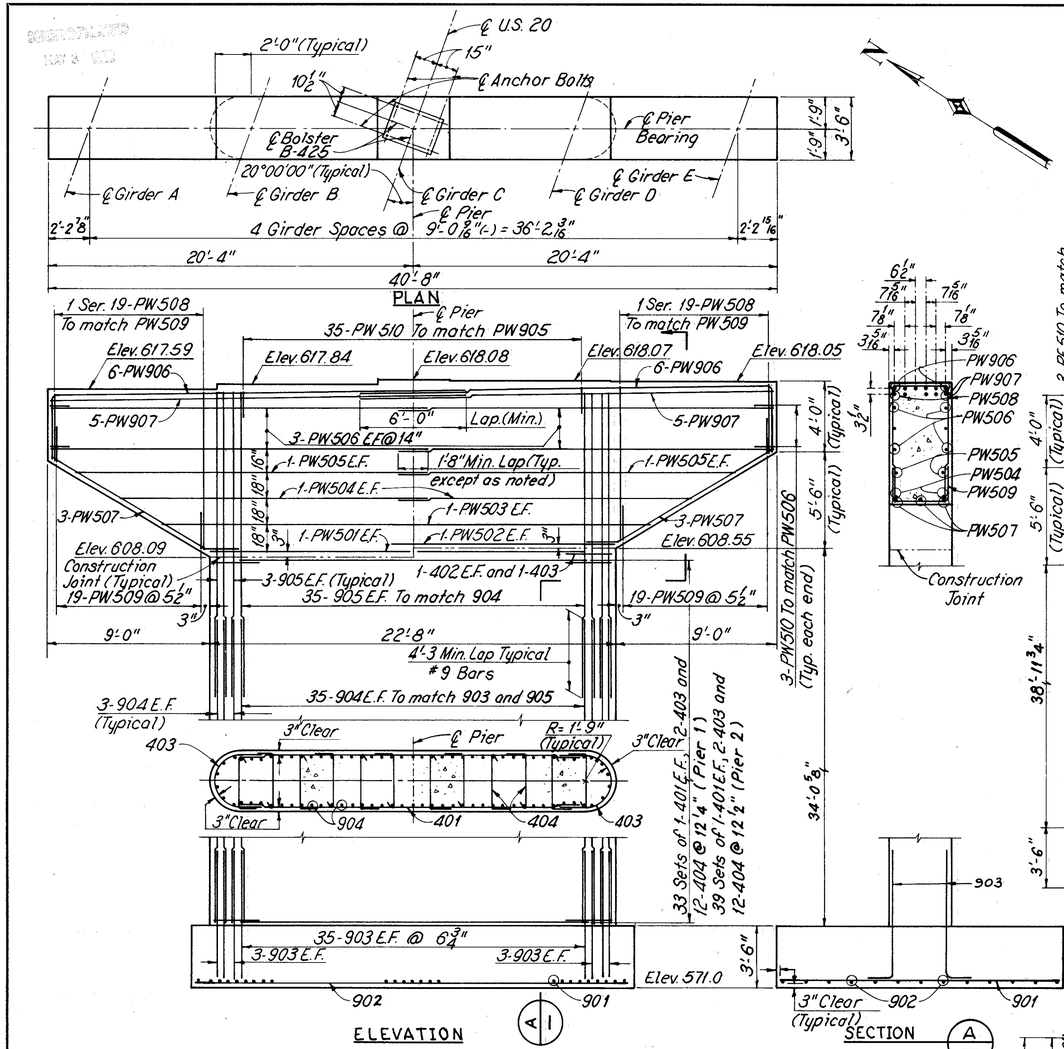

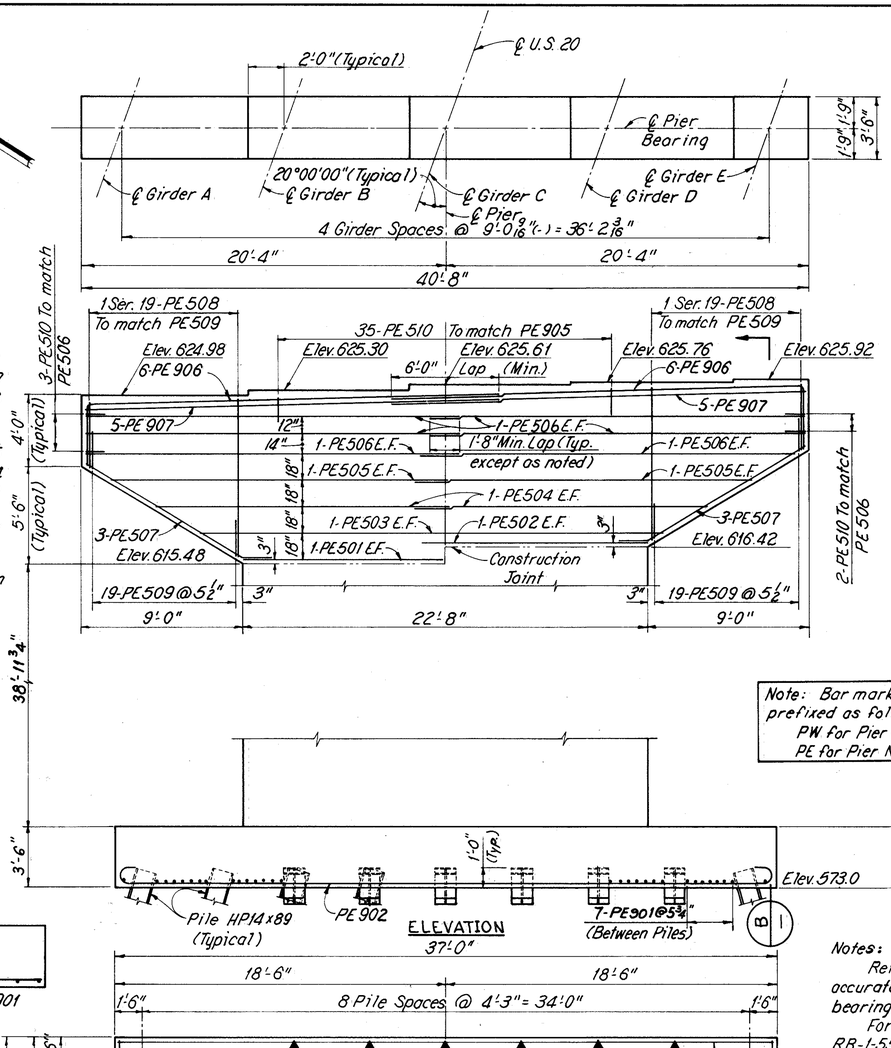

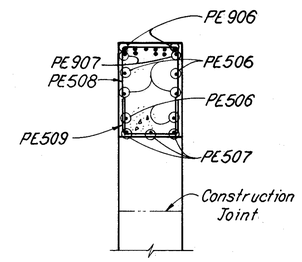

Note: Bar marks will be prefixed as follows:
PW for Pier No. 1
PE for Pier No. 2

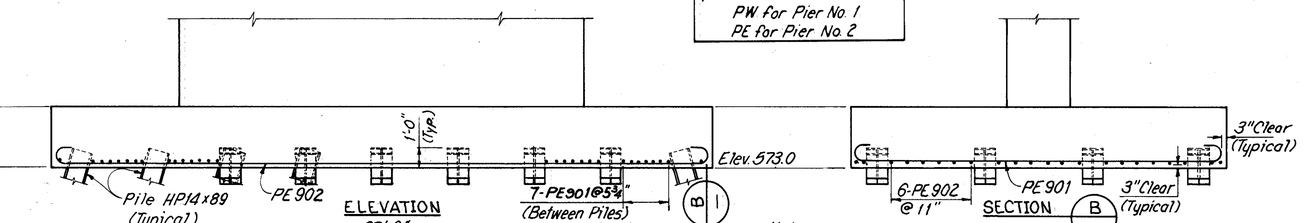

Notes:

Reinforcing steel in the vicinity of the bridge seat shall be accurately placed to avoid interference with the drilling of bearing anchor holes or pre-setting of bearing anchors.

For anchor bolt details see Ohio Standard Drawing RB-1-55.

Piles shown thus ↧ shall be battered 1:4 in the direction shown.

The following abbrevations are used:

E.F. = Each Face
Typ. = Typical
Min. = Minumum

At the option of the Contractor, bearing anchors or formed holes, located and supported by templates, may be cast in place.

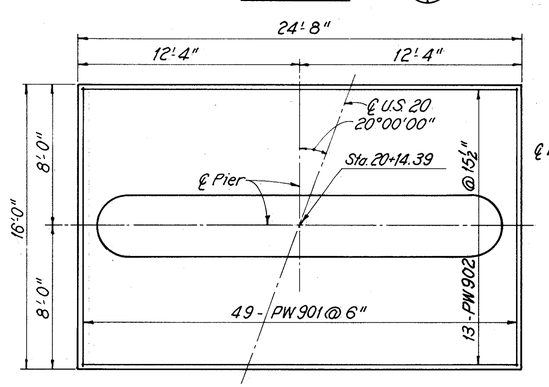

FOOTING PLAN

PIER 1

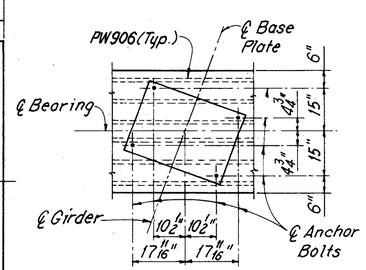

DETAIL OF ANCHOR BOLT LOCATIONS

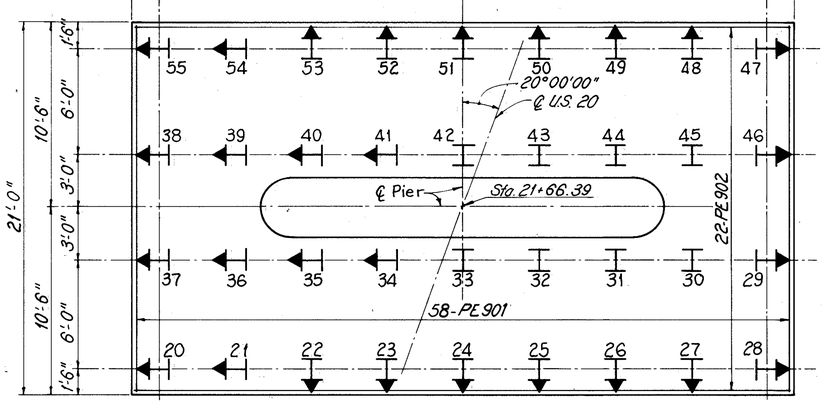

FOOTING PLAN

PIER 2

WOODRUFF, INC.
CONSULTING ENGINEERS
CLEVELAND, OHIO

PIERS

U.S. ROUTE 20 OVER THE GRAND RIVER

BR. NO.-LAK-20-1723 FROM STA. 18+91.00 TO STA. 22+89.56

LAKE COUNTY OHIO

MADE RCK	TRACED RCK	CHECKED P.G.	REVIEWED R.J.M.	REVISED
DATE 9-84	DATE 9-84	DATE 10-84	DATE 10/84	SHEET 11 / 22

U.S. 20 OVER GRAND RIVER

F.H.W.A. REGION	STATE	PROJECT	
5	OHIO		

59
86

LAKE COUNTY
LAK-20-17.14

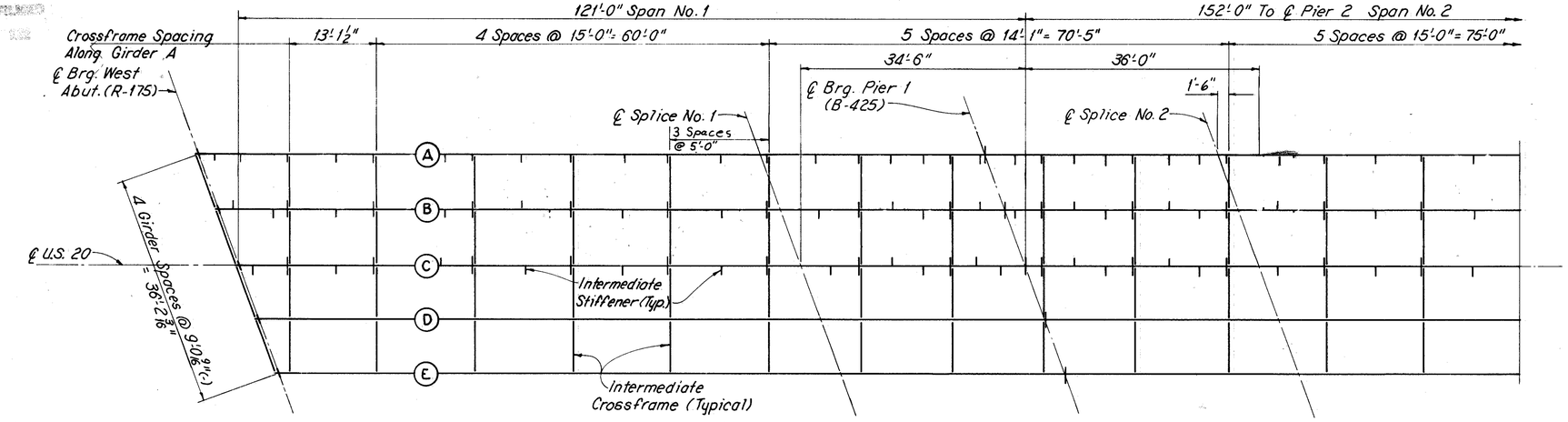

FRAMING PLAN

Note:
For Crossframe Details see Sheet 13/22

NOTES

1. ALL STRUCTURAL STEEL SHALL CONFORM TO ASTM A572, GRADE 50 STEEL, UNLESS NOTED OTHERWISE.
2. FOR GIRDER ELEVATIONS AND FRAMING DETAILS SEE SHEET 13/22
3. FOR DEFLECTION AND CAMBER DETAILS SEE SHEET 14/22
4. INTERMEDIATE STIFFENERS SHALL BE PLACED SINGLY, EXCEPT AT CROSSFRAMES OF INTERIOR GIRDERS WHERE THE STIFFENERS SHALL BE PLACED IN PAIRS. ALL INTERMEDIATE STIFFENERS SHALL BE WELDED TO THE WEB WITH 3/16" CONTINUOUS FILLET WELDS ON BOTH SIDES OF THE STIFFENERS AND SINGLY PLACED STIFFENERS SHALL BE WELDED TO THE COMPRESSION FLANGES WITH FILLET WELDS OF THE SAME SIZE AS THE WEB TO FLANGE WELD AT THE SAME LOCATION. THE INTERMEDIATE STIFFENERS SHALL BE PLACED NORMAL TO THE GIRDER FLANGE, EQUALLY SPACED BETWEEN CROSSFRAMES OR CROSSFRAMES AND BEARING STIFFENERS AT PIERS OR CROSSFRAME AND STIFFENER ADJACENT TO ABUTMENTS OR AS NOTED IN ACCORDANCE WITH THE MAXIMUM STIFFENER SPACING SHOWN ON THE GIRDER ELEVATION. *At crossframes the stiffeners shall be welded to both top and bottom flanges.*
5. IN LIEU OF A572 STEEL, A36 STEEL MAY BE FURNISHED FOR BEARINGS, EXCEPT FOR UPPER PLATE ELEMENT OF BEARING. THIS A36 STEEL SHALL BE INCLUDED WITH THE A572 STEEL QUANTITY FOR PAYMENT.

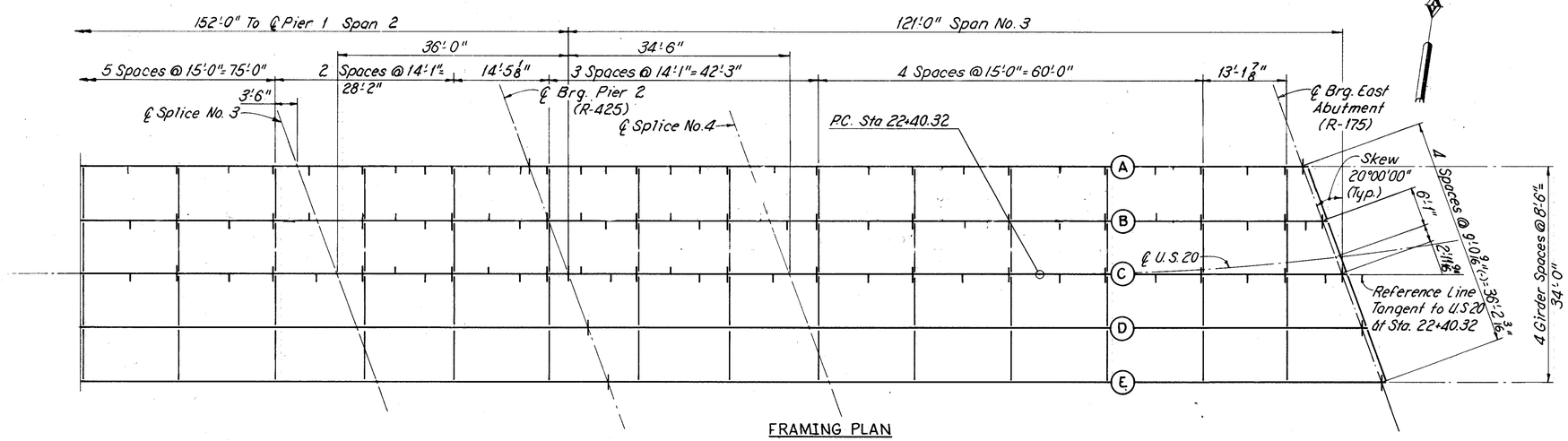

FRAMING PLAN

BEARING UNITS														
BOLSTER No.	ROCKER No.	DIMENSIONS (INCHES)												
		A	B	C	D	F	G	H	K	L	M	R	T	Y
B-425		4½	25	4½	-	7/8	-	23 5/8	17	34	-	15	4	2 3/16
	R-425	4½	25	4½	4	7/8	15	23 5/8	17	34	31	15	4	2 3/16

Note: For details not shown, see Standard Drawing RB-1-55. All bearings shall be in accordance with Standard Drawing RB-1-55 except that upper plate element shall be beveled to match roadway grade. Tabulated plate thickness 'C' shall apply at centerline of plate. (See Upper Load Plate Detail)

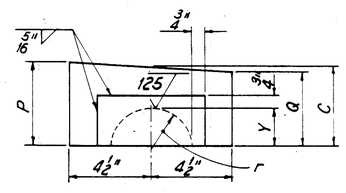

BEVELED UPPER LOAD PLATE DETAIL

LOCATION	Q	P
Pier No. 1	4 5/16	4 11/16
Pier No. 2	4¼	4¾
East Abut.	4 5/16	4 11/16

WOODRUFF, INC.
CONSULTING ENGINEERS
CLEVELAND, OHIO

FRAMING PLAN

U.S. ROUTE 20 OVER THE GRAND RIVER

BR. NO.- LAK-20-1723 FROM STA. 18+91.00 TO STA. 22+89.56

LAKE COUNTY OHIO

MADE RJP	TRACED RCK	CHECKED AJM	REVIEWED AJM	REVISED
DATE 9-84	DATE 9-84	DATE 10/84	DATE 10/84	SHEET 12 / 22

U.S. 20 OVER GRAND RIVER

F.H.W.A. REGION	STATE	PROJECT	
5	OHIO		

LAKE COUNTY
LAK-20-17.14

60
86

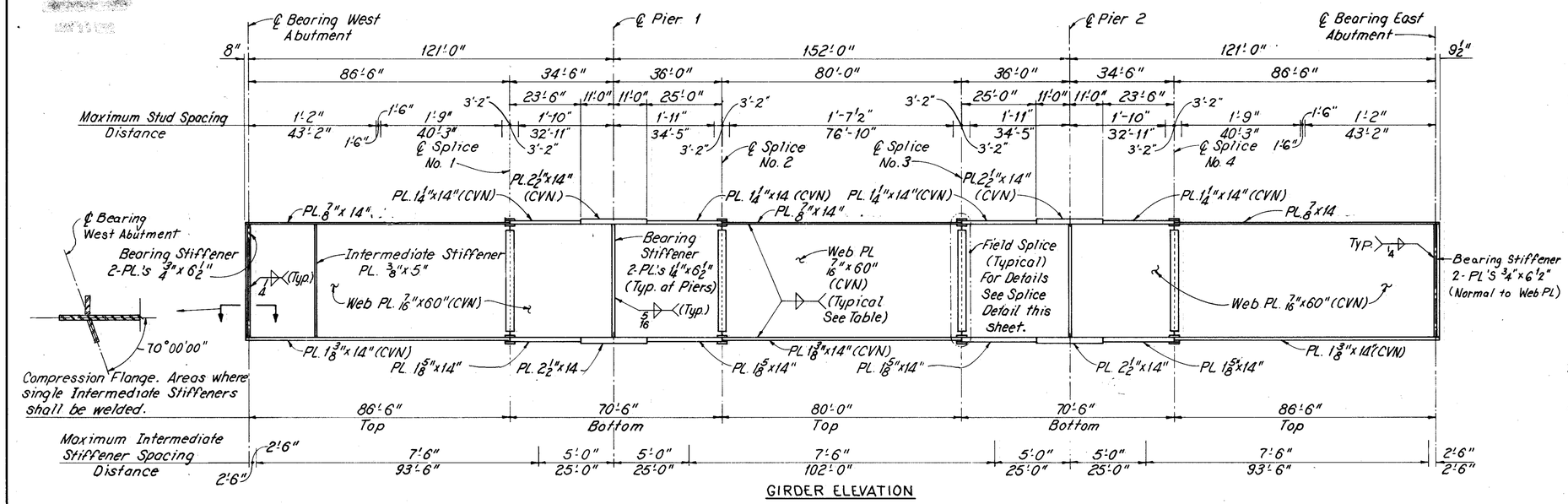

GIRDER ELEVATION

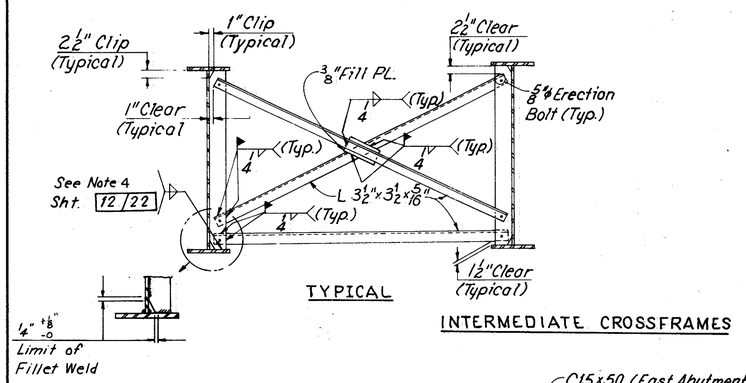

TYPICAL

INTERMEDIATE CROSSFRAMES

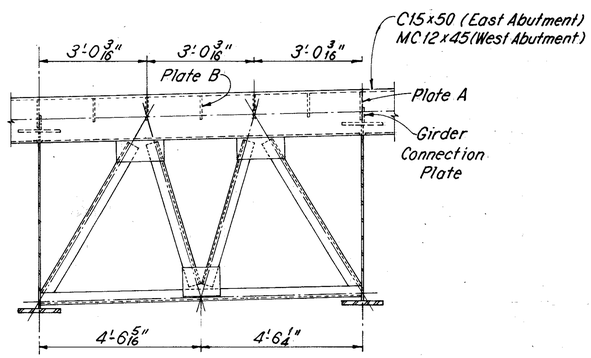

TYPICAL

END CROSSFRAMES

Note: For Details not shown see Ohio Standard Drawing EXJ-2-81 Sheets 1 and 2 of 2.

WEB TO FLANGE WELD SIZE	
FLANGE ℙ THICKNESS	FILLET WELD SIZE
7/8", 1¼" & 1⅜"	5/16"
1⅝"	⅜"
2½"	⅜"

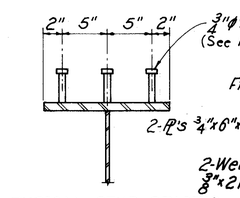

TYPICAL STUD SPACING

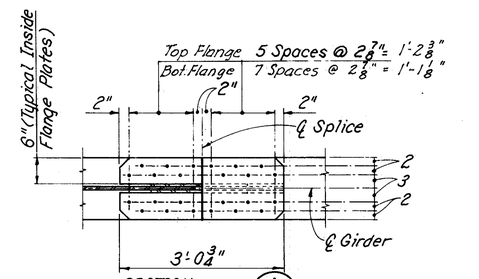

SECTION A

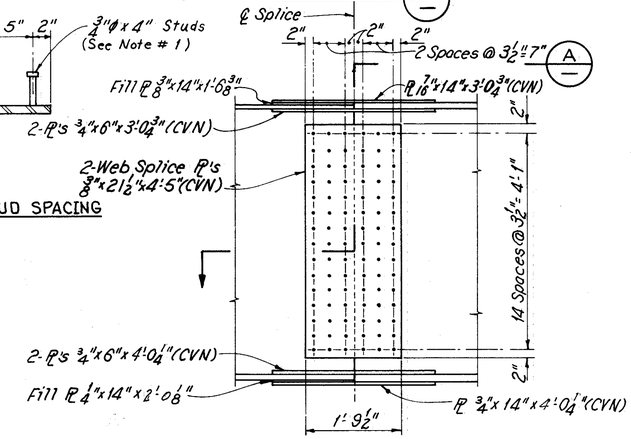

SPLICE DETAIL

For Notes and Details not shown see Ohio Standard Drawing SD-1-69 Sheet 4 of 4

NOTES

1. LOCATE STUDS IN GROUPS OF 3 AS SHOWN, SHEAR CONNECTORS MAY BE SHIFTED TO CLEAR BOLT HEADS ON SPLICE, FOR SPACING ALONG GIRDER SEE GIRDER ELEVATION.

2. WELDED ATTACHMENT OF SUPPORTS FOR CONCRETE DECK FINISHING MACHINE MAY BE MADE TO AREAS OF THE FASCIA STRINGER DESIGNATED "COMPRESSION". ATTACHMENTS SHALL NOT BE MADE TO AREAS DESIGNATED "TENSION". FILLET WELDS TO COMPRESSION FLANGES SHALL BE NOT CLOSER THAN 1" FROM EDGE OF FLANGE, BE NOT MORE THAN 2" LONG, AND BE NOT SMALLER THAN THE MINIMUM SIZE REQUIRED BY AASHTO.

3. GRINDING OF BUTT WELDS IS NOT REQUIRED.

4. ALL FIELD SPLICES SHALL BE MADE WITH 1" DIAMETER HIGH STRENGTH STEEL BOLTS CONFORMING TO A325. THE BOLTS SHALL BE PLACED WITH THEIR HEADS ON THE OUTSIDE FACE OF EXTERIOR GIRDERS AND ON THE BOTTOM OF THE BOTTOM FLANGE PLATES AND THE TOP OF THE TOP OF FLANGE PLATES.

HIGH STRENGTH BOLTS SHALL BE 1" DIAMETER A325 UNLESS OTHERWISE NOTED.

5. WHERE A SHAPE OR PLATE IS DESIGNATED (CVN) THE MATERIAL SHALL MEET SPECIFIED MINIMUM NOTCH TOUGHNESS REQUIREMENTS AS SPECIFIED IN 711.01 OF CMS.

6. ERECTION BOLTS: HOLE DIAMETER IN THE CROSSFRAMES AND GIRDER STIFFENERS SHALL BE RESPECTIVELY 1/16" AND 1/4" LARGER THAN THE DIAMETER OF THE ERECTION BOLTS. UNLESS REPLACED BY PERMANENT HIGH STRENGTH BOLTS, ERECTION BOLTS SHALL REMAIN IN PLACE. LOCK WASHERS SHALL BE FURNISHED FOR OTHER THAN FULLY TORQUED HIGH STRENGTH ERECTION BOLTS. BOLTS SHALL BE FURNISHED AS PART OF 513. IN LIEU OF ERECTION BOLTS AND AT THE OPTION OF THE CONTRACTOR, ALTERNATIVE MEANS OF TEMPORARY BRACING MAY BE USED SUBJECT TO THE APPROVAL OF THE DIRECTOR.

WOODRUFF, INC.
CONSULTING ENGINEERS
CLEVELAND, OHIO

GIRDER ELEVATION AND FRAMING DETAILS
U.S. ROUTE 20 OVER THE GRAND RIVER

BR. NO.- LAK-20-1723 FROM STA. 18+91.00 TO STA. 22+89.56

LAKE COUNTY OHIO

MADE R.J.P.	TRACED RCK	CHECKED AJM	REVIEWED AJM	REVISED
DATE 8-84	DATE 9-84	DATE 10/84	DATE 10/84	SHEET 13/22

U.S. 20 OVER GRAND RIVER

F.H.W.A. REGION	STATE	PROJECT	
5	OHIO		

61
86

LAKE COUNTY
LAK-20-17.14

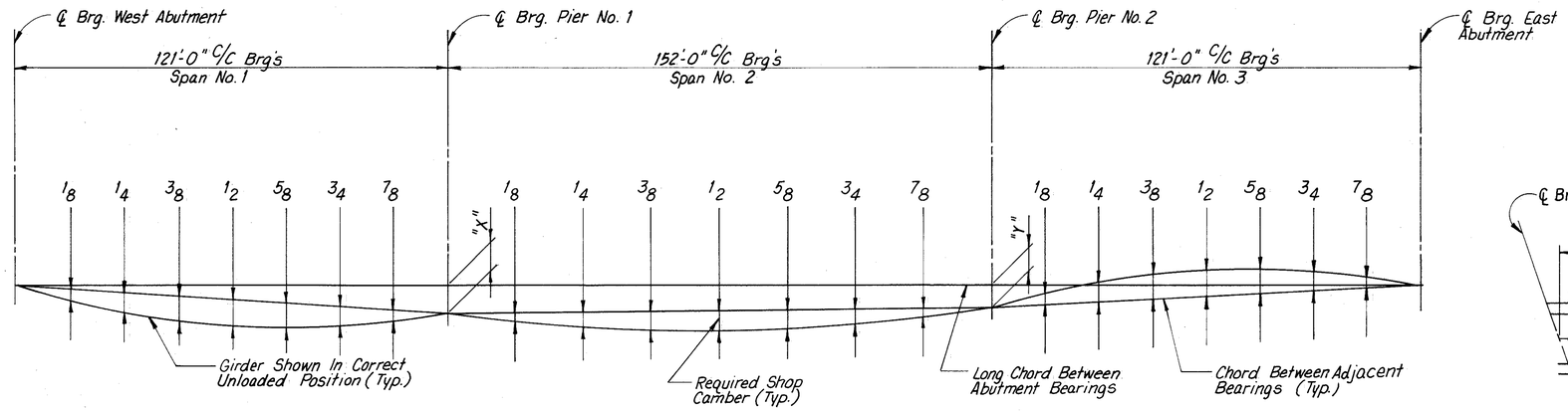

CAMBER & BLOCKING DIAGRAM

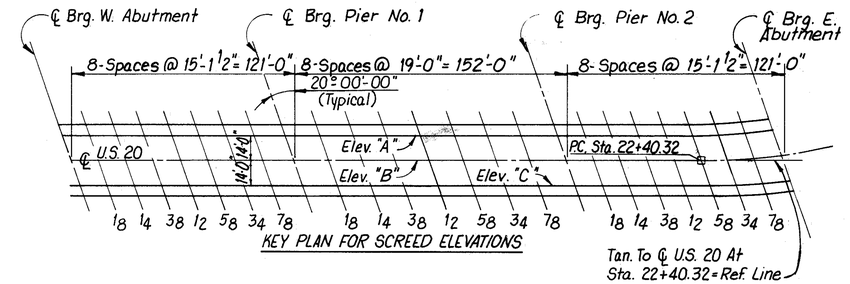

KEY PLAN FOR SCREED ELEVATIONS

DEFLECTION AND CAMBER — SPAN NO. 1

LOCATION	GIRDER A							GIRDER B							GIRDER C						
POINT	1/8	1/4	3/8	1/2	5/8	3/4	7/8	1/8	1/4	3/8	1/2	5/8	3/4	7/8	1/8	1/4	3/8	1/2	5/8	3/4	7/8
Deflection Due To Weight Of Steel	3/16	3/8	7/16	7/16	5/16	3/16	1/16	3/16	3/8	7/16	3/8	5/16	3/16	1/16	3/16	5/16	3/8	5/16	1/4	1/8	1/16
Deflection Due To Remaining Dead Load	15/16	19/16	1 7/8	1 13/16	1 3/8	3/4	1/4	15/16	1 5/8	1 15/16	1 13/16	1 3/8	3/4	3/16	15/16	1 5/8	1 15/16	1 13/16	1 3/8	3/4	3/16
Adjustment For Horizontal & Vertical Curve	-1 5/8	-2 13/16	-3 1/2	-3 3/4	-3 1/2	-2 13/16	-1 5/8	-1 5/8	-2 13/16	-3 1/2	-3 3/4	-3 1/2	-2 13/16	-1 5/8	-1 5/8	-2 13/16	-3 1/2	-3 3/4	-3 1/2	-2 13/16	-1 5/8
Required Shop Chamber	-1/2	-7/8	-1 3/16	-1 1/2	-1 13/16	-1 7/8	-1 5/16	-1/2	-13/16	-1 1/8	-1 9/16	-1 13/16	-1 7/8	-1 3/8	-1/2	-7/8	-1 3/16	-1 5/8	-1 7/8	-1 15/16	-1 3/8

LOCATION	GIRDER D							GIRDER E						
POINT	1/8	1/4	3/8	1/2	5/8	3/4	7/8	1/8	1/4	3/8	1/2	5/8	3/4	7/8
Deflection Due To Weight Of Steel	3/16	5/16	3/8	5/16	1/4	1/8	1/16	3/16	5/16	5/16	5/16	1/4	1/8	1/16
Deflection Due To Remaining Dead Load	15/16	1 5/8	1 15/16	1 13/16	1 3/8	3/4	3/16	7/8	1 9/16	1 13/16	1 3/4	1 5/16	11/16	3/16
Adjustment For Horizontal & Vertical Curve	-1 5/8	-2 13/16	-3 1/2	-3 3/4	-3 1/2	-2 13/16	-1 5/8	-1 5/8	-2 13/16	-3 1/2	-3 3/4	-3 1/2	-2 13/16	-1 5/8
Required Shop Chamber	-1/2	-7/8	-1 3/16	-1 5/8	-1 7/8	-1 15/16	-1 3/8	-9/16	-15/16	-1 3/8	-1 11/16	-1 15/16	-2	-1 3/8

DEFLECTION AND CAMBER — SPAN NO. 2

LOCATION	GIRDER A							GIRDER B							GIRDER C						
POINT	1/8	1/4	3/8	1/2	5/8	3/4	7/8	1/8	1/4	3/8	1/2	5/8	3/4	7/8	1/8	1/4	3/8	1/2	5/8	3/4	7/8
Deflection Due To Weight Of Steel	1/16	1/4	7/16	1/2	7/16	1/4	1/16	1/16	1/4	3/8	7/16	3/8	1/4	1/16	1/16	3/16	5/16	3/8	5/16	3/16	1/16
Deflection Due To Remaining Dead Load	1/4	7/8	1 1/2	1 3/4	1 1/2	13/16	3/16	5/16	1	1 11/16	2	1 11/16	1	5/16	5/16	1	1 11/16	2	1 11/16	1	5/16
Adjustment For Horizontal & Vertical Curve	-2 9/16	-4 7/16	-5 1/2	-5 7/8	-5 7/16	-4 5/16	-2 7/16	-2 9/16	-4 3/8	-5 7/16	-5 3/4	-5 3/8	-4 3/16	-2 5/16	-2 9/16	-4 3/8	-5 3/8	-5 11/16	-5 1/4	-4 1/16	-2 3/16
Required Shop Chamber	-2 1/4	-3 5/16	-3 9/16	-3 5/8	-3 1/2	-3 1/8	-2 3/16	-2 3/16	-3 1/8	-3 3/8	-3 5/16	-3 5/16	-2 5/16	-1 15/16	-2 3/16	-3 3/16	-3 3/8	-3 5/16	-3 1/4	-2 7/8	-1 13/16

LOCATION	GIRDER D							GIRDER E						
POINT	1/8	1/4	3/8	1/2	5/8	3/4	7/8	1/8	1/4	3/8	1/2	5/8	3/4	7/8
Deflection Due To Weight Of Steel	1/16	3/16	5/16	3/8	5/16	3/16	1/16	1/16	3/16	5/16	3/8	5/16	3/16	1/16
Deflection Due To Remaining Dead Load	5/16	1	1 11/16	2	1 11/16	1	5/16	5/16	1	1 11/16	2	1 34	1 1/16	5/16
Adjustment For Horizontal & Vertical Curve	-2 11/16	-4 5/8	-5 13/16	-6 1/4	-5 11/16	-4 5/16	-2 13/16	-2 13/16	-4 7/8	-6 3/16	-6 13/16	-6 1/16	-4 1/2	-2 3/16
Required Shop Chamber	-2 5/16	-3 7/16	-3 13/16	-3 7/8	-3 11/16	-3 1/8	-1 13/16	-2 7/16	-3 11/16	-4 3/16	-4 7/16	-4	-3 1/4	-1 13/16

DEFLECTION AND CAMBER — SPAN NO. 3

LOCATION	GIRDER A							GIRDER B							GIRDER C						
POINT	1/8	1/4	3/8	1/2	5/8	3/4	7/8	1/8	1/4	3/8	1/2	5/8	3/4	7/8	1/8	1/4	3/8	1/2	5/8	3/4	7/8
Deflection Due To Weight Of Steel	1/16	3/16	5/16	7/16	7/16	3/8	3/16	1/16	3/16	5/16	3/8	7/16	3/8	3/16	1/16	1/8	1/4	5/16	3/8	5/16	3/16
Deflection Due To Remaining Dead Load	5/16	7/8	1 9/16	2 1/16	2 1/8	1 3/4	15/16	3/16	3/4	1 3/8	1 13/16	1 15/16	1 5/8	15/16	3/16	3/4	1 3/8	1 13/16	1 15/16	1 5/8	15/16
Adjustment For Horizontal & Vertical Curve	1/2	2 11/16	3 7/16	3 7/8	3 1/8	2 1/8	1/8	15/16	2 5/16	2 7/8	3 3/16	2 1/2	1/2	1 3/4	15/16	1 1/8	1 7/8	2 5/16	2 3/8	2 1/16	1/16
Required Shop Chamber	1/8	3/3 4	5 5/16	6 3/8	5 11/16	4 1/4	2 5/16	1 9/16	3 1/4	4 9/16	5 3/8	4 7/8	3 3/4	2 1/16	1 3/8	2 3/4	3 15/16	4 1/2	4 3/8	3 3/8	1/8

LOCATION	GIRDER D							GIRDER E						
POINT	1/8	1/4	3/8	1/2	5/8	3/4	7/8	1/8	1/4	3/8	1/2	5/8	3/4	7/8
Deflection Due To Weight Of Steel	1/16	1/8	1/4	5/16	3/8	5/16	3/16	1/16	1/8	1/4	5/16	5/16	5/16	3/16
Deflection Due To Remaining Dead Load	3/16	3/4	1 3/8	1 13/16	1 15/16	1 5/8	15/16	3/16	5/8	1 3/16	1 15/16	1 5/8	1 1/16	7/16
Adjustment For Horizontal & Vertical Curve	15/16	1 13/16	2 7/16	2 5/8	2 3/8	1 11/16	7/8	13/16	1 15/16	2 11/16	3 1/8	2 3/4	1 15/16	15/16
Required Shop Chamber	1 3/16	2 11/16	4 1/16	4 3/4	4 11/16	3 5/8	2	1 1/16	2 11/16	4 1/8	5 1/16	4 3/4	3 11/16	2

Note: A Positive Camber Means The Camber Above And A Negative Camber Means The Camber Below The Chord Between Adjacent Bearings In The Span. Required Deflections And Adjustments Are Given To The Nearest 1/16 Inch.

BLOCKING DIMENSIONS

GIRDER NO.	A	B	C	D	E
DIM. "X"	1'-11 3/4"	1'-11 3/4"	1'-11 3/4"	2'-0 3/4"	2'-1 13/16
DIM. "Y"	11 9/16"	11 3/16"	11 3/8"	1'-0 5/8"	1'-1 13/16

TABLE OF SCREED ELEVATIONS

ELEVATION "A"				ELEVATION "B"				ELEVATION "C"			
LOCATION	STATION	OFFSET	ELEVATION	LOCATION	STATION	OFFSET*	ELEVATION	LOCATION	STATION	OFFSET	ELEVATION
℄ BRG. W. ABUT.	18+88.30	14'-0" LT.	622.749	℄ BRG. W. ABUT.	18+93.39	–	623.048	℄ BRG. W. ABUT.	18+98.49	14'-0" RT.	622.913
1/8	19+03.42	14'-0" LT.	623.074	1/8	19+08.52	–	623.387	1/8	19+13.61	14'-0" RT.	623.263
1/4	19+18.55	14'-0" LT.	623.419	1/4	19+23.64	–	623.746	1/4	19+28.74	14'-0" RT.	623.633
3/8	19+33.67	14'-0" LT.	623.773	3/8	19+38.77	–	624.113	3/8	19+43.86	14'-0" RT.	624.011
1/2	19+48.80	14'-0" LT.	624.131	1/2	19+53.89	–	624.483	1/2	19+58.99	14'-0" RT.	624.396
5/8	19+63.92	14'-0" LT.	624.499	5/8	19+69.02	–	624.865	5/8	19+74.11	14'-0" RT.	624.791
3/4	19+79.05	14'-0" LT.	624.893	3/4	19+84.14	–	625.270	3/4	19+89.24	14'-0" RT.	625.212
7/8	19+94.17	14'-0" LT.	625.332	7/8	19+99.27	–	625.721	7/8	20+04.36	14'-0" RT.	625.678
℄ PIER NO. 1	20+09.30	14'-0" LT.	625.836	℄ Pier No. 1	20+14.39	–	626.240	℄ PIER NO. 1	20+19.49	14'-0" RT.	626.210
1/8	20+28.30	14'-0" LT.	626.570	1/8	20+33.39	–	626.993	1/8	20+38.49	14'-0" RT.	626.980
1/4	20+47.30	14'-0" LT.	627.401	1/4	20+52.39	–	627.884	1/4	20+57.49	14'-0" RT.	627.848
3/8	20+66.30	14'-0" LT.	628.292	3/8	20+71.39	–	628.755	3/8	20+76.49	14'-0" RT.	628.776
1/2	20+85.30	14'-0" LT.	629.211	1/2	20+90.39	–	629.692	1/2	20+95.49	14'-0" RT.	629.730
5/8	21+04.30	14'-0" LT.	630.148	5/8	21+09.39	–	630.647	5/8	21+14.49	14'-0" RT.	630.738
3/4	21+23.30	14'-0" LT.	631.115	3/4	21+28.39	–	631.628	3/4	21+33.49	14'-0" RT.	631.784
7/8	21+42.30	14'-0" LT.	632.143	7/8	21+47.39	–	632.668	7/8	21+52.49	14'-0" RT.	632.888
℄ PIER NO. 2	21+61.30	14'-0" LT.	633.251	℄ Pier No. 2	21+66.39	–	633.766	℄ PIER NO. 2	21+71.49	14'-0" RT.	634.019
1/8	21+76.42	14'-0" LT.	634.142	1/8	21+81.52	–	634.643	1/8	21+86.61	14'-0" RT.	634.923
1/4	21+91.55	14'-0" LT.	635.031	1/4	21+96.64	–	635.518	1/4	22+01.74	14'-0" RT.	635.866
3/8	22+06.67	14'-0" LT.	635.895	3/8	22+11.77	–	636.369	3/8	22+16.86	14'-0" RT.	636.790
1/2	22+21.80	14'-0" LT.	636.711	1/2	22+26.84	–	637.175	1/2	22+31.99	14'-0" RT.	638.165
5/8	22+36.91	14.0290' LT.	637.402	5/8	22+42.01	0.0032'	637.922	5/8	22+46.87	14.0581' RT.	638.468
3/4	22+52.31	14.3237' LT.	638.031	3/4	22+57.01	0.3881'	638.598	3/4	22+61.44	14.6059' RT.	639.194
7/8	22+67.68	14.6060' LT.	638.593	7/8	22+71.83	1.3819'	639.204	7/8	22+75.95	15.7260' RT.	639.883
℄ BRG. E. ABUT.	22+82.90	14.8609' LT.	639.094	℄ BRG. E. ABUT.	22+86.49	2.9653'	639.754	℄ BRG. E. ABUT.	22+90.27	17.0133' RT.	640.532

For Elevation "B" Offsets Shown Are Dimensions Measured From The Reference Line In A Direction Parallel To The Centerline Of Bearing.

Note: The Elevations Shown Are Top Of Concrete Slab Elevations Which Are Required Before The Concrete Is Placed. Proper Allowance Has Been Made For The Deadload Deflections Caused By The Weight Of The Concrete Slab.

WOODRUFF, INC.
CONSULTING ENGINEERS
CLEVELAND, OHIO

DEFLECTION, CAMBER & SCREED ELEVATION

U.S. ROUTE 20 OVER THE GRAND RIVER

BR. NO.-LAK-20-17.23 FROM STA. 18+91.00 TO STA. 22+89.56

LAKE COUNTY OHIO

MADE RJP	TRACED MAG	CHECKED PG	REVIEWED RJM	REVISED
DATE 9-84	DATE 9-84	DATE 10-84	DATE 10/84	SHEET 14 / 22

U.S. 20 OVER GRAND RIVER

F.H.W.A. REGION	STATE	PROJECT	
5	OHIO		

LAKE COUNTY
LAK-20-17.14

62 / 86

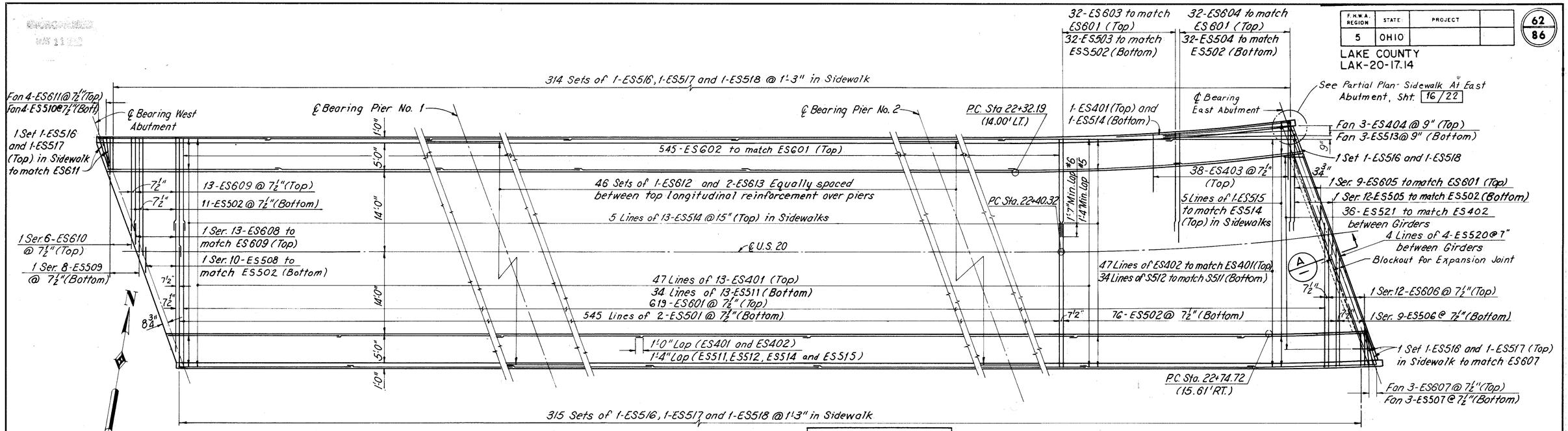

SLAB PLAN

Note:
All bar marks shall be prefixed S.

* Indicates dimension is normal to curb line

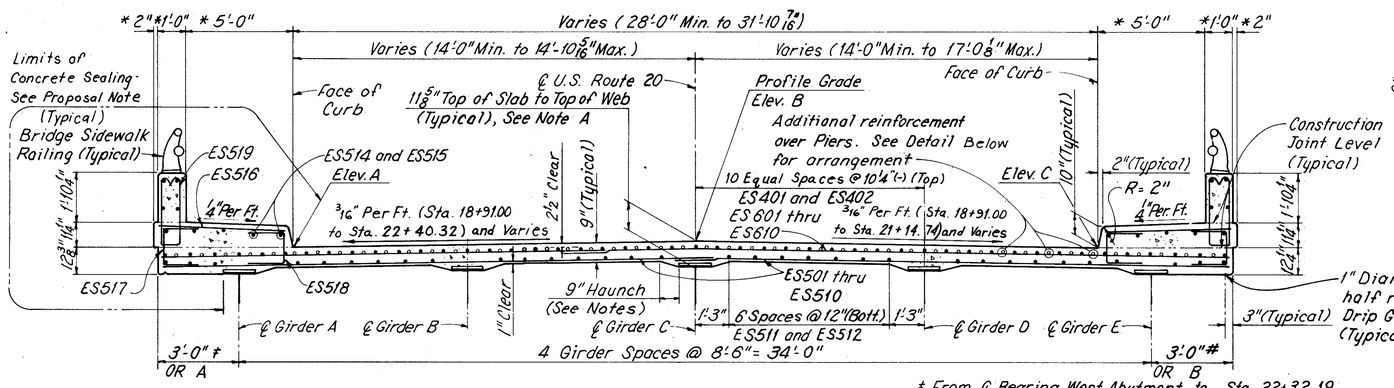

TRANSVERSE SECTION

‡ From ℄ Bearing West Abutment to Sta. 22+32.19
\# From ℄ Bearing West Abutment to Sta. 22+74.72

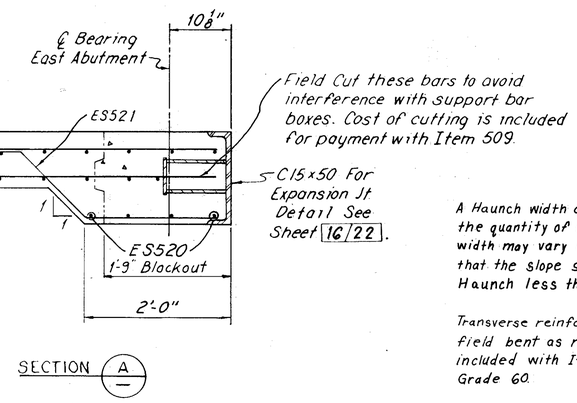

SECTION A/A

NOTES

A Haunch width of 9" shall be used for computing the quantity of concrete. However, the Haunch width may vary between 6" and 12" (provided that the slope shall be not more than 1:4 for a Haunch less than 9" width.)

Transverse reinforcement, end of Span 3, shall be field bent as required. Payment shall be included with Item 509, Reinforcing Steel, Grade 60.

For Elevations A, B and C see Table of Screed Elevations, Sheet 14/22

Note A:
This is the design dimension. The quantity of deck concrete to be paid for shall be based upon this dimension, even though deviation from it may be necessary because the top flange of the girder may not have the exact camber or conformation required to place it parallel to the finished grade. Deduction shall be made for volume of encased steel plates as per 511.18.

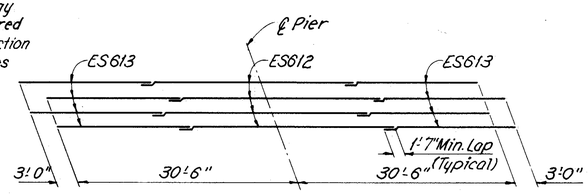

ADDITIONAL REINFORCEMENT OVER PIERS

SLAB OFFSET TABLE				
	5/8	3/4	7/8	℄ Brg. East Abut.
A	3'-0 3/16"	3'-5 5/8"	4'-6 5/16"	6'-2 3/8"
B	3'-0"	3'-0"	2'-11 7/8"	2'-6 5/8"

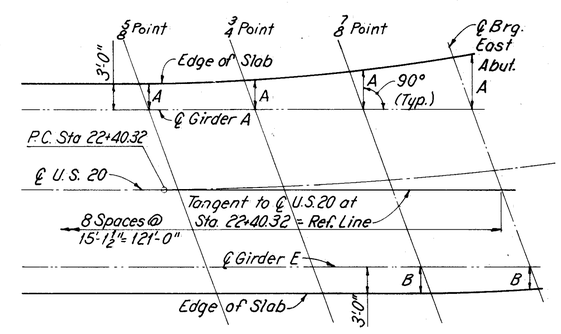

KEY PLAN FOR SLAB OFFSETS

WOODRUFF, INC.
CONSULTING ENGINEERS
CLEVELAND, OHIO

SLAB PLAN AND TRANSVERSE SECTION
U.S. ROUTE 20 OVER THE GRAND RIVER

BR. NO.-LAK-20-17.23 FROM STA. 18+91.00 TO STA. 22+89.56

LAKE COUNTY OHIO

MADE RCK	TRACED RCK	CHECKED P.G.	REVIEWED A.J.M.	REVISED
DATE 7-84	DATE 7-84	DATE 10-84	DATE 10/84	SHEET 15/22

U.S. 20 OVER GRAND RIVER

F.H.W.A. REGION	STATE	PROJECT	
5	OHIO		

LAKE COUNTY
LAK-20-17.14

63 / 86

TEMPERATURE ADJUSTMENT FOR "A"							
40°	50°	60°	70°	80°	90°	MAX.	MIN.
8 1/4"	8 1/16"	7 7/8"	7 11/16"	7 1/2"	7 5/16"	5"	11"

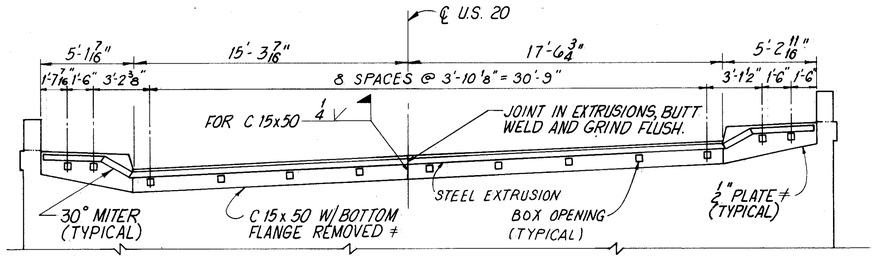

ELEVATION
EAST ABUTMENT EXPANSION JOINT ALONG FACE OF ABUTMENT BACKWALL

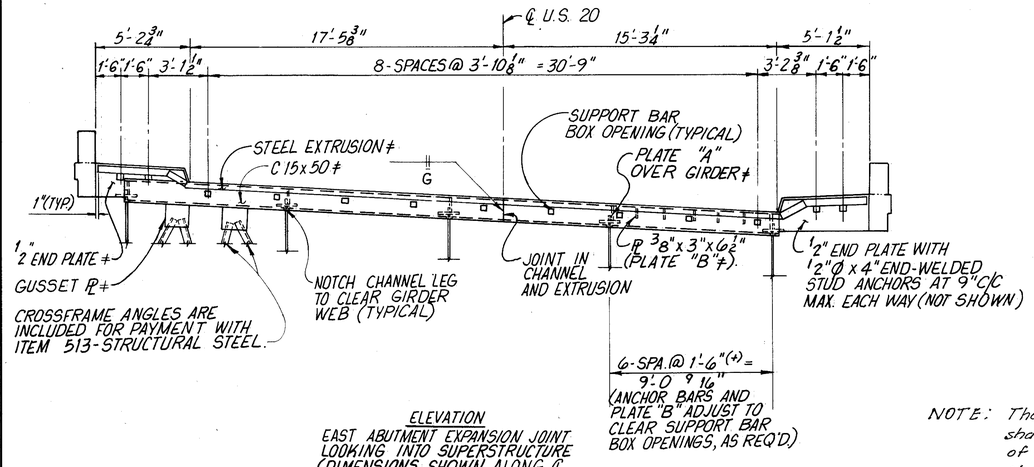

ELEVATION
EAST ABUTMENT EXPANSION JOINT LOOKING INTO SUPERSTRUCTURE (DIMENSIONS SHOWN ALONG ℄ OF BEARING)

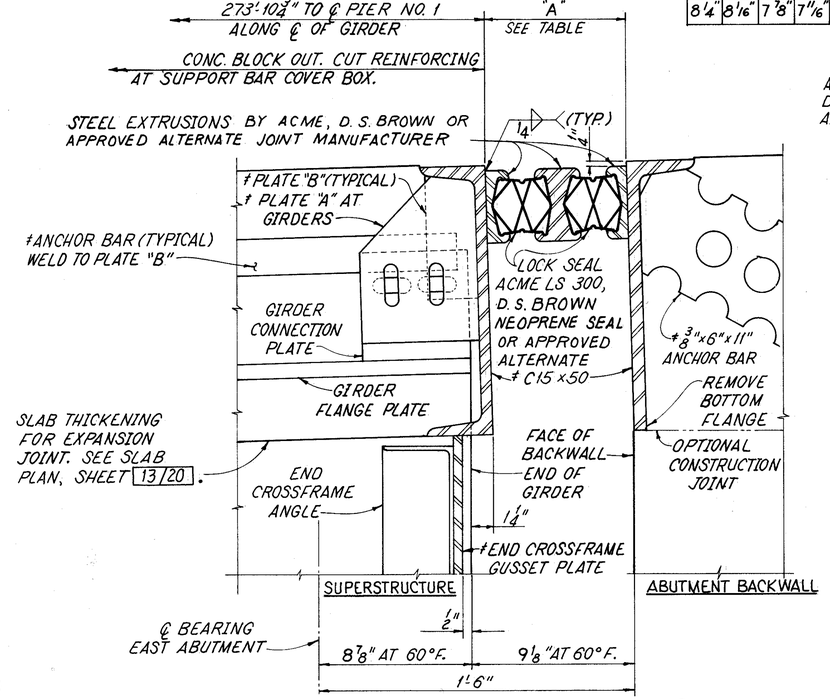

MODULAR EXPANSION JOINT AT EAST ABUTMENT
SECTION TAKEN PERPENDICULAR TO JOINT.
SUPPORT BAR AND COVER BOX NOT SHOWN.

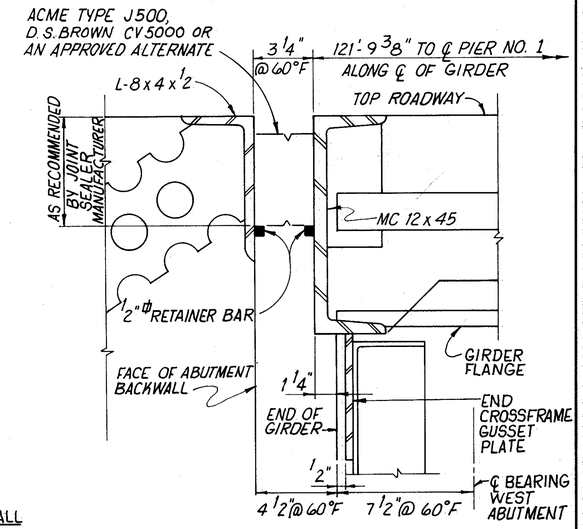

EXPANSION JOINT AT WEST ABUTMENT
SECTION TAKEN PERPENDICULAR TO JOINT FOR DETAILS NOT SHOWN AND FOR ADDITIONAL DETAILS AT SIDEWALK SEE STD. DWGS. EXJ-2-81 SHEETS 1 AND 2.

NOTE: The Expansion Joint Systems shall be designed for an Impact of 100%. This may require a change in the spacing of the support bars, from what has been shown.

NOTE: THE REQUIRED BLOCKOUT, EXPANSION JOINT, SNOW PLOW PROTECTOR, REINFORCING AND ANY OTHER ITEMS NECESSARY TO COMPLETE THIS JOINT ARE TO BE DETERMINED, DESIGNED, DETAILED AND SUPPLIED BY THE EXPANSION JOINT VENDOR AND SUBMITTED FOR APPROVAL. THE VENDOR'S REPRESENTATIVE SHALL BE PRESENT AND SUPERVISE THE INSTALLATION. SEE GENERAL NOTES.

≠ INDICATES MEMBERS TO BE INCLUDED FOR PAYMENT IN THE UNIT PRICE BID FOR ITEM 516-STRUCTURAL EXPANSION JOINTS, OR MODULAR EXPANSION JOINTS INCLUDING ELASTOMERIC COMPRESSION SEALS AND STEEL EXTRUSIONS.

FOR DECK SLAB THICKENING AND REINFORCING AT EAST ABUTMENT EXPANSION JOINT SEE SLAB PLAN SHEET 15/22.

FOR DETAILS OF JOINT ARMOR, SUPPORT BARS AND CONNECTORS, AND JOINT TREATMENT THROUGH SIDEWALK SEE OHIO STANDARD DRAWING EXJ-2-81 SHTS. 1 AND 2 OF 2.

FOR GENERAL NOTES SEE SHEET 3/22 AND 4/22.

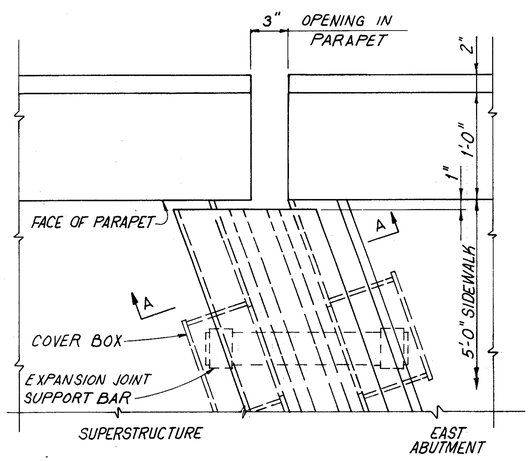

PARTIAL PLAN- SIDEWALK AT EAST ABUTMENT

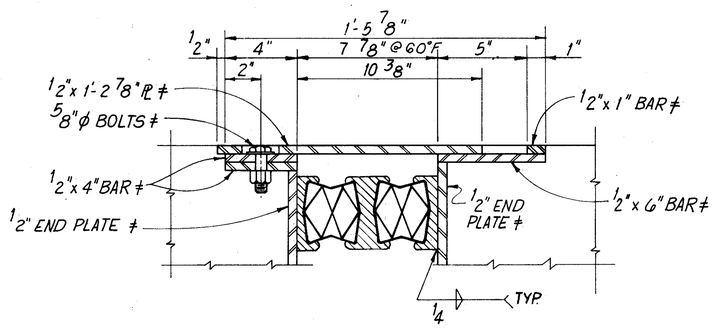

SECTION A-A

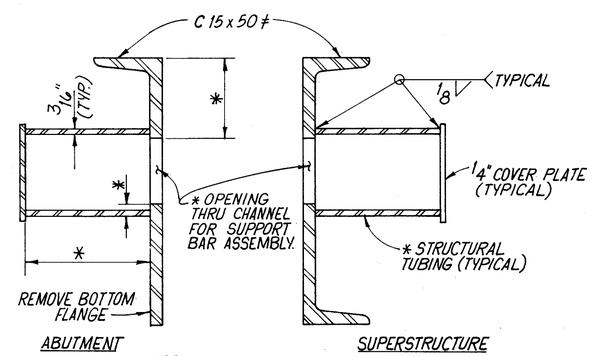

NOTE:
* DENOTES ITEMS THAT SHALL BE VERIFIED BY THE JOINT MANUFACTURER, PRIOR TO FABRICATION.

COVER BOX DETAIL

WOODRUFF, INC.
CONSULTING ENGINEERS
CLEVELAND, OHIO

EXPANSION JOINT DETAILS

U.S. ROUTE 20 OVER THE GRAND RIVER

BR. NO.-LAK-20-1723 FROM STA. 18+91.00 TO STA. 22+89.56

LAKE COUNTY OHIO

MADE R.J.P.	TRACED MAG.	CHECKED AJM	REVIEWED AJM	REVISED
DATE 9-84	DATE 9-84	DATE 10/84	DATE 10/84	SHEET 16/22

U.S. 20 OVER GRAND RIVER

F.H.W.A. REGION	STATE	PROJECT	
5	OHIO		

LAKE COUNTY
LAK-20-17.14

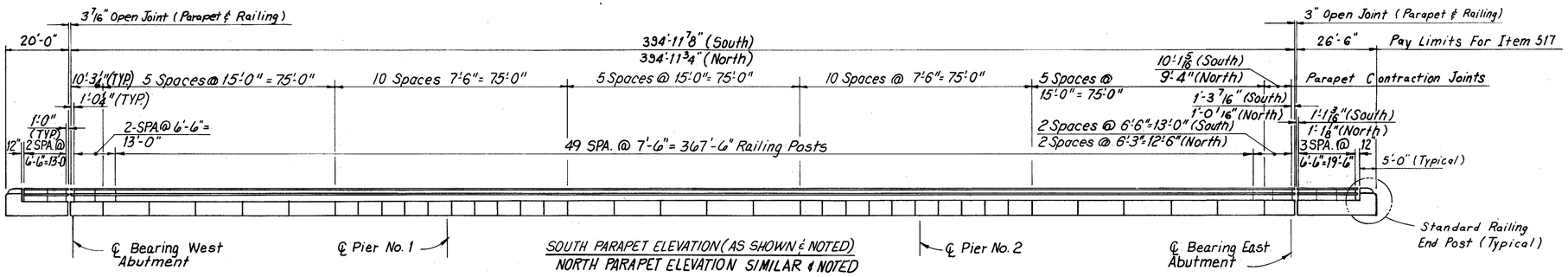

SOUTH PARAPET ELEVATION (AS SHOWN & NOTED)
NORTH PARAPET ELEVATION SIMILAR & NOTED

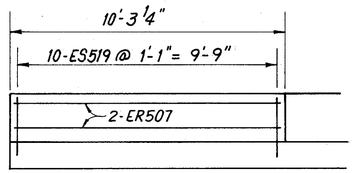

TYPICAL 10'-3 1/4" PANEL

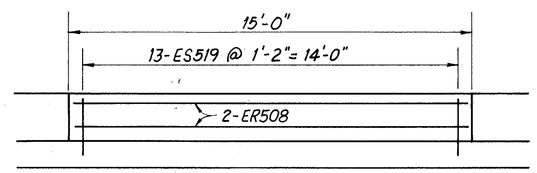

TYPICAL 15'-0" PANEL

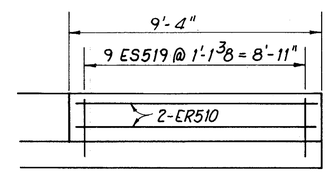

TYPICAL 9'-4" PANEL

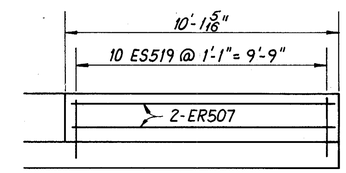

TYPICAL 10'-1 5/16" PANEL

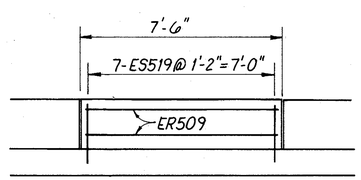

TYPICAL 7'-6" PANEL

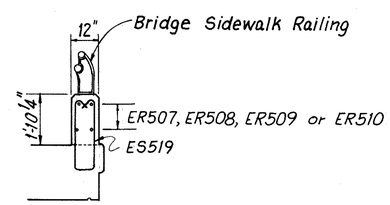

TYPICAL SECTION

NOTES

1. All Horizontal Dimensions Measured Along Outside Face Of Parapet.
2. For Details At Wingwalls See Respective Abutment Details.
3. See Standard Drawing BR-2-82 Of O.D.O.T. Standard Bridge Drawings For Additional Details.

WOODRUFF, INC.
CONSULTING ENGINEERS
CLEVELAND, OHIO

RAILING DETAILS

U.S. ROUTE 20 OVER
THE GRAND RIVER

BR. NO.-LAK-20-1723 FROM STA. 18+91.00
TO STA. 22+89.56

LAKE COUNTY OHIO

MADE PAC.	TRACED MAC	CHECKED RJP	REVIEWED RJM	REVISED
DATE 9-84	DATE 9-84	DATE 10-84	DATE 10/84	SHEET 17/22

U.S.20 OVER GRAND RIVER

QUANTITY CALCULATIONS
BY C.E.R. DATE 8-84
CHKD. I.M. DATE 9-84
WOODRUFF, INC.

F.H.W.A. REGION	STATE	PROJECT	
5	OHIO		

LAKE COUNTY
LAK-20-17.14

66 / 86

MARK	NUMBER	LENGTH	TYPE	SER. INCR.	WEIGHT (LBS)	A	B	C	R
WEST ABUTMENT									
AW501	31	7'-9"	1		251	5'-4"	1'-4"		
AW502	2	5'-11"	1		12	3'-6"	1'-4"		
AW503	14	11'-9"	3		172	3'-0"	2'-7"		
AW504	14	11'-3"	3		164	3'-0"	2'-4"		
AW505	35	7'-3"	2		265	10"	6'-6"		
EAW506	31	6'-4"	1		205	3'-5"	1'-7"		
AW507	12	21'-9"	STR.		272				
EAW508	10	22'-0"	STR.		229				
AW509	4	3'-4"	8		14	9"	1'-4"	1'-4"	$4\frac{3}{8}$
AW510	10	5'-8"	STR.		59				
AW511	10	8'-0"	STR.		83				
EAW512	2	5'-5"	STR.		11				
EAW513	2	6'-0"	STR.		13				
AW514	18	7'-11"	STR.		149				
AW515	2 SER 6	7'-1" / 3'-8"	STR.	$8\frac{3}{16}$"	67				
AW516	2 SER 6	6'-7" / 3'-2"	STR.	$8\frac{3}{16}$"	61				
AW517	24	4'-1"	1		102	1'-2"	1'-7"		
EAW518	28	6'-3"	6		183	8"	2'-6"		
AW519	4	13'-9"	STR.		57				
AW520	4	8'-8"	STR.		36				
AW521	4	13'-5"	STR.		56				
AW522	4	9'-1"	STR.		38				
AW523	2 SER 3	11'-8" / 17'-5"	STR.	$2'-10\frac{1}{2}$"	91				
AW524	2 SER 3	9'-5" / 15'-2"	STR.	$2'-10\frac{1}{2}$"	77				
AW525	18	19'-8"	STR.		369				
AW526	12	17'-5"	STR.		218				
AW527	4	10'-0"	4		42	8'-9"	1'-3"		6
EAW529	24	21'-9"	STR.		544				
AW601	29	14'-3"	7		621	5'-4"	6'-6"	2'-9"	
AW602	3	8'-8"	1		39	3'-6"	2'-9"		
EAW603	61	7'-9"	1		710	1'-5"	3'-4"		
EAW604	14	16'-1"	1		338	1'-5"	7'-6"		
EAW605	14	4'-5"	1		93	11"	1'-11"		
EAW606	47	12'-9"	1		900	1'-5"	5'-10"		
EAW607	47	5'-11"	1		418	11"	2'-8"		
AW608	3	9'-11"	2		45	1'-0"	9'-3"		
AW609	6	19'-4"	1		174	1'-2"	9'-3"		
AW610	3	9'-6"	2		43	1'-0"	8'-10"		
AW611	6	18'-6"	1		167	1'-2"	8'-10"		
AW612	12	7'-5"	STR.		134				

MARK	NUMBER	LENGTH	TYPE	SER. INCR.	WEIGHT (LBS)	A	B	C	R
AW801	12	24'-5"	STR.		782				
AW802	2	24'-4"	4		130	22'-11"	1'-5"		$4\frac{5}{8}$
AW803	2	16'-10"	STR.		90				
AW804	4	13'-5"	STR.		143				
AW805	2	16'-0"	STR.		85				
AW806	4	13'-1"	STR.		140				
AW807	4	6'-8"	STR.		71				
AW808	20	4'-11"	5		263	2'-7"	1'-0"		
TOTAL UNCOATED BARS					5,765				
TOTAL EPOXY COATED BARS					3,644				
EAST ABUTMENT									
AE501	31	8'-6"	1		275	6'-1"	1'-4"		
AE502	1	6'-8"	1		7	4'-3"	1'-4"		
AE503	17	11'-1"	3		197	3'-0"	2'-4"		
AE504	17	11'-7"	3		205	3'-0"	2'-7"		
AE505	32	7'-3"	2		242	10"	6'-6"		
EAE506	30	9'-11"	1		310	4'-2"	3'-0"		
AE507	12	23'-3"	STR.		291				
AE508	4	3'-4"	8		14	9"	1'-4"	1'-4"	$4\frac{3}{8}$
EAE509	10	23'-6"	STR.		245				
AE510	9	6'-6"	STR.		61				
AE511	9	7'-6"	STR.		70				
EAE512	2	5'-3"	STR.		11				
EAE513	2	5'-9"	STR.		12				
AE514	13	8'-2"	STR.		111				
AE515	2 SER 6	8'-2" / 3'-8"	STR.	$10\frac{3}{4}$"	74				
AE516	2 SER 6	7'-8" / 3'-2"	STR.	$10\frac{3}{4}$"	68				
AE517	32	3'-7"	1		120	1'-2"	1'-4"		
EAE518	38	6'-3"	6		248	8"	2'-6"		
AE519	4	20'-8"	STR.		86				
AE520	9	16'-9"	STR.		157				
AE521	2 SER 4	24'-0" / 18'-2"	STR.	$1-11\frac{3}{8}$	176				
AE522	2 SER 4	22'-1" / 16'-4"	STR.	1-11	160				
AE523	10	26'-2"	STR.		273				
AE524	8	23'-4"	STR.		195				
AE525	4	10'-4"	4		43	9'-4"	1'-0"		8
AE526	2	8'-10"	2		18	10"	8'-1"		
AE527	5	20'-5"	STR.		106				
EAE529	24	23'-3"	STR.		582				

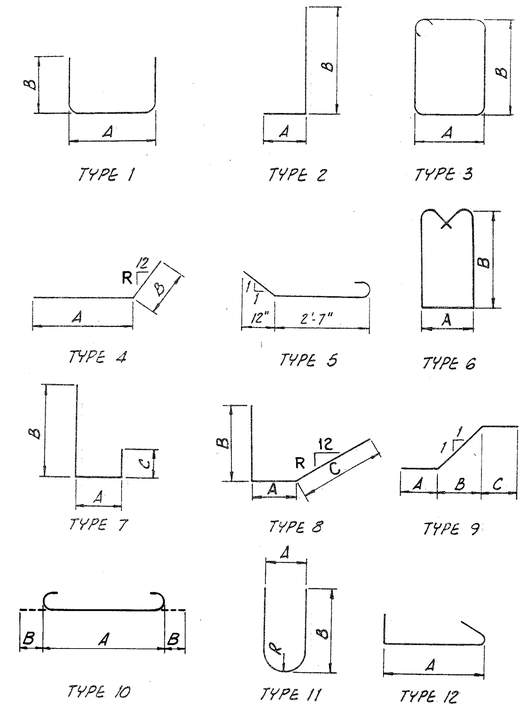

BAR BENDING DIAGRAMS

REINFORCING STEEL SAMPLES
REFER TO CMS SECTIONS 106.03, 700, 709.01 THROUGH 709.05 AND 709.08. SUFFICIENT ADDITIONAL REINFORCING STEEL SHALL BE PROVIDED FOR SAMPLING. RANDOM SAMPLES SHALL BE REPLACED IN THE STRUCTURES BY THE ADDITIONAL STEEL, SPLICED IN ACCORDANCE WITH 509.08.

WOODRUFF, INC.
CONSULTING ENGINEERS
CLEVELAND, OHIO

REINFORCING STEEL LIST

U.S. ROUTE 20 OVER THE GRAND RIVER

BR. NO. LAK-20-1723 FROM STA. 18+91.00 TO STA. 22+89.56

LAKE COUNTY OHIO

MADE RCK DAG. DATE 8-84	TRACED MAG DATE 9-84	CHECKED PG DATE 10-84	REVIEWED AJM DATE 10/84	REVISED SHEET 19/22

U.S. 20 OVER GRAND RIVER

QUANTITY CALCULATIONS
BY C.E.R. DATE 9-85
CHKD. I.M. DATE 9-85
WOODRUFF, INC.

F.H.W.A. REGION	STATE	PROJECT	
5	OHIO		

LAKE COUNTY
LAK-20-17.14

67
86

MARK	NUMBER	LENGTH	TYPE	SER. INCR.	WEIGHT (LBS)	A	B	C	R
EAST ABUTMENT									
AE601	29	15'-0"	7		653	6'-1"	6'-6"	2'-9"	
AE602	3	9'-5"	1		42	4'-3"	2'-9"		
EAE603	64	8'-4"	1		801	1'-8"	3'-6"		
EAE604	13	16'-6"	1		322	1'-8"	7'-7"		
EAE605	14	4'-8"	1		98	1'-2"	1'-11"		
EAE606	50	13'-4"	1		1,001	1'-8"	6'-0"		
EAE607	50	6'-6"	1		488	1'-2"	2'-10"		
AE608	3	10'-0"	2		45	1'-0"	9'-2"		
AE609	10	19'-2"	1		288	1'-2"	9'-2"		
AE610	20	7'-8"	STR.		230				
AE611	3	11'-11"	2		54	1'-0"	11'-1"		
AE612	10	23'-0"	1		345	1'-2"	11'-1"		
AE801	12	25'-9"	STR.		825				
AE802	2	26'-1"	4		139	24'-9"	1'-4"		2¼
AE803	2	23'-9"	STR.		127				
AE804	4	19'-3"	STR.		206				
AE805	2	23'-1"	STR.		123				
AE806	4	18'-10"	STR.		201				
AE807	4	6'-8"	STR.		71				
AE808	23	4'-11"	5		302	2'-7"	1'-0"		
TOTAL UNCOATED BARS					6,600				
TOTAL EPOXY COATED BARS					4,118				
PIER #1									
PW401	68	19'-2"	STR.		871				
PW402	2	9'-5"	STR.		13				
PW403	69	6'-9"	11		311	3'-0"	2'-6"		1'-6"
PW404	408	4'-0"	12		1,090	3'-0"			
PW501	2	10'-10"	STR.		23				
PW502	2	11'-10"	STR.		25				
PW503	2	27'-0"	STR.		56				
PW504	4	16'-9"	STR.		70				
PW505	4	19'-3"	STR.		80				
PW506	12	21'-0"	STR.		263				
PW507	6	11'-11"	4		75	10'-3"	1'-8"		7⅜
PW508	2 SER 19	20'-7" / 10'-7"	1	6⅝"	618	3'-2"	8'-10" / 3'-10"		
PW509	38	6'-11"	1		274	3'-2"	2'-0"		
PW510	41	4'-11"	1		210	3'-2"	1'-0"		

MARK	NUMBER	LENGTH	TYPE	SER. INCR.	WEIGHT (LBS)	A	B	C	R
PW901	49	15'-6"	STR.		2,582				
PW902	13	24'-2"	STR.		1,068				
PW903	82	8'-8"	2		2,416	1'-7"	7'-4"		
PW904	82	30'-0"	STR.		8,364				
PW905	82	16'-9"	STR.		4,670				
PW906	12	26'-6"	2		1,081	3'-7"	23-2		
PW907	10	23'-2"	STR.		788				
TOTAL UNCOATED BARS					24,948				
PIER #2									
PE401	78	19'-2"	STR.		999				
PE402	2	9'-5"	STR.		13				
PE403	79	6'-9"	11		356	3'-0"	2'-6"		1'-6"
PE404	468	4'-0"	12		1,250	3'-0"			
PE501	2	10'-10"	STR.		23				
PE502	2	11'-10"	STR.		25				
PE503	2	26'-3"	STR.		55				
PE504	4	16'-5"	STR.		68				
PE505	4	18'-10"	STR.		79				
PE506	12	21'-0"	STR.		263				
PE507	6	11'-11"	4		75	10'-3"	1'-8"		7⅜
PE508	2 SER 19	20'-3" / 10'-9"	1	6 5/16"	614	3'-2"	8'-8" / 3'-11"		
PE509	38	6'-11"	1		274	3'-2"	2'-3"		
PE510	40	4'-11"	1		205	3'-2"	1'-0"		
PE901	58	23'-0"	10		4,536	20'-6"	1'-3"		
PE902	22	39'-0"	10		2,917	36'-6"	1'-3"		
PE903	82	9'-8"	2		2,695	1'-4"	8'-4"		
PE904	82	30'-0"	STR.		8,364				
PE905	82	22'-3"	STR.		6,203				
PE906	12	26'-6"	2		1,081	3'-7"	23'-2"		
PE907	10	23'-2"	STR.		788				
TOTAL UNCOATED BARS					30,883				

MARK	NUMBER	LENGTH	TYPE	SER. INCR.	WEIGTH (LBS)	A	B	C	R
BRIDGE DECK SLAB									
ES401	612	30'-0"	STR.		12,264				
ES402	47	17'-11"	STR.		563				
ES403	38	10'-1"	STR.		256				
ES404	3	22'-8"	STR.		45				
ES501	1,090	20'-6"	STR.		23,306				
ES502	86	20'-6"	STR.		1,839				
ES503	32	21'-7"	STR.		720				
ES504	32	23'-7"	STR.		787				
ES505	1 SER. 12	21'-6" / 2'-6"	STR.	1'-8¾"	150				
ES506	1 SER. 9	18'-9" / 4'-9"	STR.	1'-9"	110				
ES507	3	4'-8"	STR.		15				
ES508	1 SER. 10	18'-3" / 2'-10"	STR.	1'-8⅝"	110				
ES509	1 SER. 8	19'-3" / 5'-8"	STR.	1'-11¼"	104				
ES510	4	5'-8"	STR.		24				
ES511	442	30'-0"	STR.		13,830				
ES512	34	22'-3"	STR.		789				
ES513	3	22'-8"	STR.		71				
ES514	131	30'-0"	STR.		4,099				
ES515	10	22'-3"	STR.		232				
ES516	635	5'-6"	STR.		3,643				
ES517	633	3'-10"	1		2,531	1'-5"	1'-4"		
ES518	631	3'-8"	1		2,413	1'-3"	1'-4"		
ES519	728	6'-3"	6		4,746	8"	2'-6"		
ES520	16	8'-9"	STR.		146				
ES521	36	4'-2"	9		156	1'-8"	1'-3"	1'-3"	

WOODRUFF, INC.
CONSULTING ENGINEERS
CLEVELAND, OHIO

REINFORCING STEEL LIST

U.S. ROUTE 20 OVER
THE GRAND RIVER

BR. NO. LAK-20-1723 FROM STA. 18+91.00
TO STA. 22+89.56

LAKE COUNTY OHIO

MADE	TRACED	CHECKED	REVIEWED	REVISED
P.A.G.	M.G.	P.G.	R.J.M.	
DATE 9-84	DATE 9-84	DATE 10-84	DATE 10/84	SHEET 20/22

U.S. 20 OVER GRAND RIVER

QUANTITY CALCULATIONS
BY C.E.R. DATE 9-85
CHKD. I.M. DATE 9-85
WOODRUFF, INC.

F.H.W.A. REGION	STATE	PROJECT	
5	OHIO		

LAKE COUNTY
LAK-20-17.14

68
86

MARK	NUMBER	LENGTH	TYPE	SER. INCR.	WEIGHT (LBS)	A	B	C	R
		BRIDGE DECK SLAB							
ES601	619	25'-0"	STR.		23,243				
ES602	545	16'-4"	STR.		13,370				
ES603	32	17'-4"	STR.		833				
ES604	32	19'-4"	STR.		929				
ES605	1 SER 9	17'-3" / 3'-3"	STR.	1'-9"	139				
ES606	1 SER 12	23'-4" / 4'-9"	STR.	1'-9"	253				
ES607	3	4'-8"	STR.		21				
ES608	1 SER 13	22'-7" / 2'-0"	STR.	1'-8 5/8"	240				
ES609	13	16'-3"	STR.		317				
ES610	1 SER 6	15'-9" / 7'-2"	STR.	1'-8 5/8"	103				
ES611	4	5'-8"	STR.		34				
ES612	92	30'-0"	STR.		4,146				
ES613	184	18'-7"	STR.		5,136				
TOTAL EPOXY COATED BARS.					121,713				
		RAILINGS							
ER501	16	3'-3"	Bt.	*	**				
ER502	8	6'-7"	Bt.	*	**				
ER503	8	8'-11"	Bt.	*	**				
ER504	16	8'-3"	Bt.	*	**				
ER505	8	4'-8"	STR.	*	**				
ER506	8	19'-8"	STR.	*					
ER507	8	9'-8"	STR.	*					
ER508	60	14'-5"	STR.	*					
ER509	80	6'-11"	STR.	*					
ER510	4	8'-10"	STR.	*					
ER511	8	26'-2"	STR.	*					

MARK	NUMBER	LENGTH	TYPE	SER. INCR.	WEIGHT (LBS)	A	B	C	R

MARK	NUMBER	LENGTH	TYPE	SER. INCR.	WEIGTH (LBS)	A	B	C	R

* To Be included with Item 517, Railings, for payment.
** See Std. drawing BR-2-82 for bending diagrams and placement.

WOODRUFF, INC.
CONSULTING ENGINEERS
CLEVELAND, OHIO

REINFORCING STEEL LIST

U.S. ROUTE 20 OVER
THE GRAND RIVER

BR. NO. LAK-20-1723 FROM STA. 18+91.00
TO STA. 22+89.56

LAKE COUNTY OHIO

MADE	TRACED	CHECKED	REVIEWED	REVISED
R.L.K. P.G.	MAG	P.G.	A.J.M.	
DATE 10-84	DATE 9-84	DATE 10-84	DATE 10/84	SHEET 21/22

U.S. 20 OVER GRAND RIVER

QUANTITY CALCULATIONS
BY R.C.K. DATE 8-84
CHKD. AJM DATE 8/84
WOODRUFF, INC.

F.H.W.A. REGION	STATE	PROJECT	
5	OHIO		

LAKE COUNTY
LAK-20-17.14

69
86

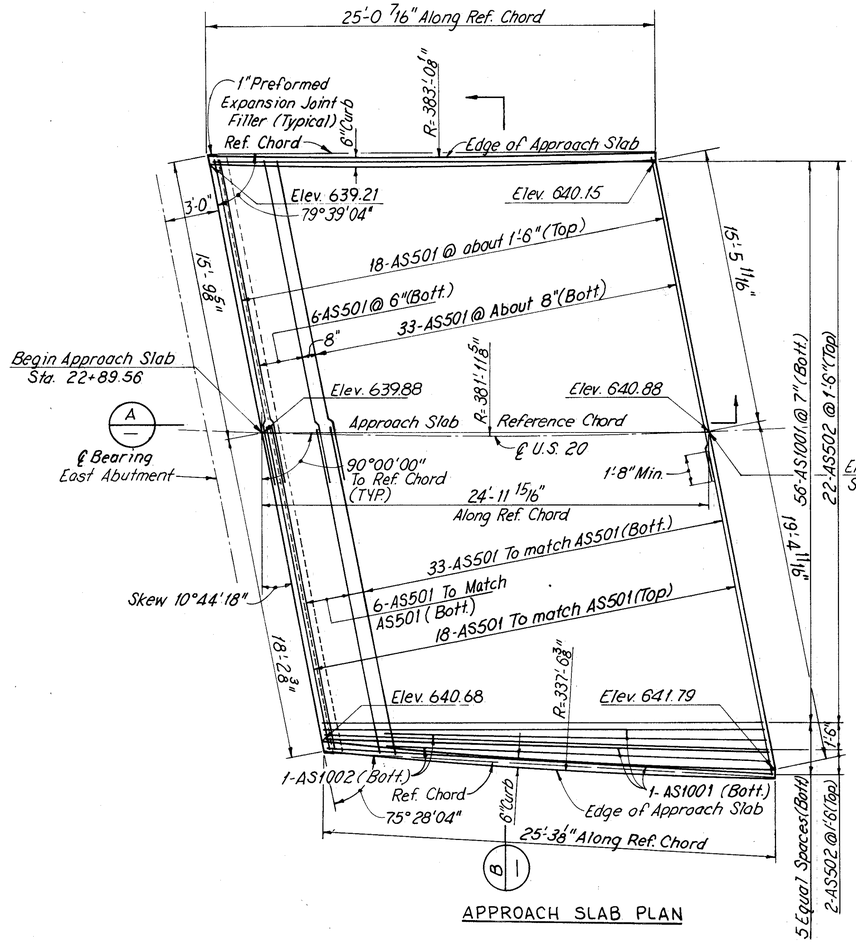

APPROACH SLAB PLAN

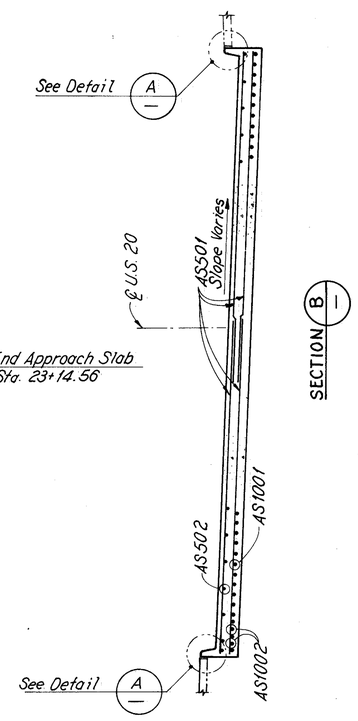

SECTION B 1

REINFORCEMENT SCHEDULE						
MARK	NO.	LENGTH	TYPE	A	B	WEIGHT
AS501	114	18'-6"	Str.			2,200
AS502	24	24'-6"	Str.			613
AS1001	59	25'-11	1	24'-6"		6,580
AS1002	2	19'-6"	Str.			168
Total Weight						9,561

Item 611 - Reinforced Concrete Approach Slab
95 Sq. Yds.

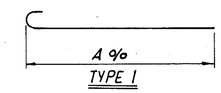

Note:
For details not shown and for additional notes see Ohio Standard Drawing AS-1-81 Sheets 1, 2 and 3 of 3.

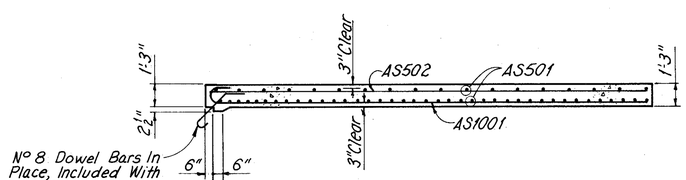

SECTION A

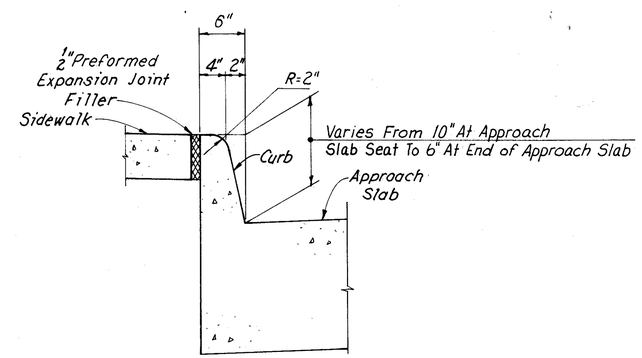

DETAIL A

WOODRUFF, INC.
CONSULTING ENGINEERS
CLEVELAND, OHIO

APPROACH SLAB DETAILS

U.S. ROUTE 20 OVER
THE GRAND RIVER

BR. NO.-LAK-20-1723 FROM STA. 18+91.00
TO STA. 22+89.56

LAKE COUNTY OHIO

MADE	TRACED	CHECKED	REVIEWED	REVISED
RCK	RCK	RJP	AJM	
DATE 8-84	DATE 8-84	DATE 10-84	DATE 10/84	SHEET 22/22

U.S. 20 OVER GRAND RIVER

WATERWORK NOTES

SPECIFICATIONS:

GENERAL

ALL WATER WORK SHALL BE PERFORMED IN ACCORDANCE WITH THE CITY OF PAINESVILLE WATERWORK SPECIFICATIONS UNLESS OTHERWISE NOTED IN THE PLANS.

DEFINITIONS:

(A) WHENEVER IN THESE SPECIFICATIONS OR IN ANY DOCUMENTS OR INSTRUCTIONS IN CONSTRUCTION WHERE THESE SPECIFICATIONS GOVERN, THE FOLLOWING TERMS ARE USED, (OR PRONOUNS IN PLACE OF THEM). THE INTENT AND MEANING SHALL BE INTERRUPTED AS FOLLOWS:

1. THE STATE

   THE STATE IS THE STATE OF OHIO ACTING THROUGH ITS AUTHORIZED REPRESENTATIVE.

2. ENGINEER

   THE ENGINEER IS THE DISTRICT DEPUTY DIRECTOR OR DISTRICT ENGINEER, THE DISTRICT CONSTRUCTION ENGINEER OR THE DISTRICT MAINTENANCE ENGINEER, OR THE PROJECT ENGINEER ASSIGNED TO ADMINISTER THE CONTRACT.

3. THE CITY, OR THE CITY OF PAINESVILLE

   THE CITY, OR THE CITY OF PAINESVILLE, IS THE CITY ENGINEER AND HIS DULY AUTHORIZED WATER DEPARTMENT REPRESENTATIVE.

SCOPE OF WORK:

THE WORK CONTEMPLATED UNDER THIS CONTRACT COMPRISES THE FURNISHING AND ~~INSTALLING OF DUCTILE IRON PIPE, CLASS 57 ASA, AND GALVANIZED 12.75" O.D. X 0.50" WALL STEEL WITH ALL APPURTENANCES, COMPLETE IN ALL DETAILS, TESTED AND READY FOR OPERATION, AND THE~~ EXTENSION, INSTALLATION, RELOCATION, RESETTING AND ADJUSTMENT OF ALL VALVES AND BOXES, HYDRANTS, AND METERS AND SERVICE CONNECTIONS AFFECTED BY THE ROADWAY CONSTRUCTION AS INDICATED IN THESE PLANS. THE CONTRACTOR SHALL DO ALL THE WORK AND FURNISH ALL THE LABOR AND MATERIALS NECESSARY FOR THE PROPER AND FINAL COMPLETION HEREIN SPECIFIED, AND IN ACCORDANCE WITH THE CONTRACT DRAWINGS.

ALL WATERMAIN JOINTS SHALL BE RESTRAINED AND TARRED AND SHALL ALLOW UP TO 5° DEFLECTION. ALL UNDERGROUND WATERMAIN SHALL BE POLYWRAPPED. ALL WATER VALVES SHALL BE BUTTERFLY TYPE, EXCEPT OTHERWISE SHOWN.

INTERRUPTION OF SERVICE NOTICE

THE CONTRACTOR SHALL COOPERATE WITH AND GIVE THE CITY OF PAINESVILLE 48 HOURS PRIOR NOTICE ON ALL WORK WHICH WILL INTERRUPT THE WATER SERVICE. ALL INSTRUCTIONS SHALL BE WORKED THROUGH THE PROJECT ENGINEER.

THE EXISTING 12" WATER MAIN MAY BE TAKEN OUT OF SERVICE FOR A MAXIMUM PERIOD OF TWO (2) HOURS. THIS SHUT-DOWN MUST BE COORDINATED WITH THE CITY OF PAINESVILLE AND THE OBRON CORPORATION.

~~COVER ON PROPOSED WATER MAIN~~

~~NEW WATER MAIN SHALL BE LAID SO AS TO PROVIDE FULL FIVE (5') FEET OF COVER UNLESS OTHERWISE SPECIFIED OR INDICATED ON THE PLANS.~~

HYDRANTS, VALVES AND BOXES REMOVED

ALL EXISTING HYDRANTS, VALVES, AND BOXES REMOVED SHALL BECOME THE PROPERTY OF THE CITY OF PAINESVILLE.

TESTING

ALL TESTING, SAMPLING, AND STERILIZING SHALL CONFORM TO THE CITY OF PAINESVILLE WATERWORK SPECIFICATIONS AND SHALL BE INCLUDED FOR PAYMENT IN THE UNIT PRICE BID FOR PERTINENT WATERWORK ITEMS.

GENERAL REQUIREMENTS

THE FOLLOWING PROCEDURES AND MATERIAL SPECIFICATIONS ARE FOR THE CONSTRUCTION OF A POTABLE WATER SYSTEM INCLUDING MAINS, SERVICE BRANCHES, FITTINGS, ETC. AS PRESCRIBED BY THE CITY ENGINEER AND THE SUPERINTENDENT OF THE WATER DEPARTMENT.

THE CONTRACTOR SHALL PROVIDE ALL LABOR, EQUIPMENT, MATERIALS AND INCIDENTALS TO COMPLETE THE WORK ON ANY PAINESVILLE CITY SPONSORED PROJECT AS SPECIFIED BY THE CITY ENGINEER AND THE SUPERINTENDENT OF THE WATER DEPARTMENT. THIS WORK TO INCLUDE EXCAVATING, PIPE INSTALLATION, JOINTING, HYDROSTATIC TESTING, DISINFECTION, BACKFILLING, RESTORATION OF DISTURBED FACILITIES AND OTHER RELATED WORK NECESSARY TO COMPLETE THE PROJECT AS DESIGNED.

ALL NECESSARY PERMITS AND INSPECTION FEES SHALL BE OBTAINED AND PAID FOR BY THE CONTRACTOR PRIOR TO BEGINNING THE PROJECT.

THE CONTRACTOR SHALL NOTIFY THE PAINESVILLE WATER DEPARTMENT AND THE CITY ENGINEER 48 HOURS BEFORE CONSTRUCTION TO ARRANGE FOR INSPECTION. ALL WORK SHALL AT ALL TIMES BE SUBJECT TO THE DIRECT SUPERVISION AND INSPECTION OF THE CITY ENGINEER AND/OR HIS DULY AUTHORIZED REPRESENTATIVE.

THE CONTRACTOR IS RESPONSIBLE FOR NOTIFYING ALL AFFECTED UTILITIES (1-800-362-2764) PRIOR TO CONSTRUCTION. THE CONTRACTOR SHALL ASSUME ALL RESPONSIBILITY FOR THE PROTECTION OF ANY EXISTING FACILITY TO REMAIN IN SERVICE DURING CONSTRUCTION. ANY FACILITIES DAMAGED BY THE CONTRACTOR DURING CONSTRUCTION SHALL BE REPAIRED OR REPLACED BY THE CONTRACTOR AT HIS EXPENSE.

~~THE CONTRACTOR SHALL NOT CLOSE ANY ROAD TO TRAFFIC AT ANY TIME. WHEN NECESSARY, THE CONTRACTOR SHALL MAINTAIN ONE-WAY TRAFFIC.~~

IT IS THE RESPONSIBILITY OF THE CONTRACTOR TO MAKE HIS OWN INVESTIGATION OF SUBSURFACE CONDITIONS PRIOR TO CONSTRUCTION AND TO CONFIRM EXISTING UTILITY LOCATIONS.

ITEM 202 WATERMAIN REMOVED FOR STORAGE

AFTER INSTALLING THE CUT IN VALVES AND BEFORE DEMOLITION OF THE EXISTING STRUCTURE, THE CONTRACTOR SHALL CAREFULLY REMOVE THE EXISTING WATERMAIN AND RELATED APPURTENANCES LOCATED ON THE STRUCTURE. THE WATERMAIN SHALL BE STORED ON SITE FOR PICKUP BY CITY OF PAINESVILLE FORCES. THE PAINESVILLE CITY ENGINEER SHALL BE NOTIFIED AT LEAST 48 HOURS PRIOR TO COMMENCING THIS OPERATION.

BASIS OF PAYMENT SHALL BE THE UNIT PRICE BID PER LIN. FT. OF WATERMAIN REMOVED. PRICE SHALL INCLUDE ALL LABOR AND EQUIPMENT TO COMPLETE THIS ITEM. THE FOLLOWING ESTIMATED QUANTITY HAS BEEN INCLUDED IN THE GENERAL SUMMARY FOR THIS WORK.

ITEM 202 WATERMAIN REMOVED FOR STORAGE 257 LIN. FT.

WATERWORK NOTES

~~WHEN THE PRESSURE TEST HAS BEEN COMPLETED AND APPROVED, THE MAIN SHALL BE SHUT OFF AND LEFT CLOSED FOR A 24 HOUR PERIOD TO ALLOW FOR COMPLETE DISSOLVING OF THE DISINFECTANT MATERIAL. AT THE END OF THE DISINFECTING PERIOD, THE MAIN SHALL BE FLUSHED TO REMOVE ANY FOREIGN MATERIAL. AFTER THOROUGH FLUSHING, THE MAIN IS AGAIN TO BE SHUT OFF AND LEFT CLOSED FOR A 24 HOUR PERIOD. SAMPLS SHALL BE TAKEN AFTER 24 AND 48 HOURS TO BE TESTED AT THE PAINESVILLE CITY WATER PLANT LABORATORY FOR BACTERIAL QUALITY. IF BOTH SAMPLES PROVE TO BE FREE OF BACTERIA, THE MAIN SHALL BE APPROVED FOR SERVICE.~~

~~IF THE SAMPLES PROVE NOT TO BE FREE OF BACTERIA, FLUSHING, DISINFECTING AND SAMPLES SHALL BE REPEATED AS NECESSARY TO PROVIDE A BACTERIA-FREE RESULT.~~

~~THE CITY OF PAINESVILLE WILL FURNISH THE NECESSARY WATER FOR ONE TEST ONLY. ANY ADDITIONAL WATER REQUIRED TO FURNISH AND INSTALL MANUAL AIR RELEASE OUTLETS AND FILL INLETS WHERE SHOWN ON THE PLANS OR WHERE DIRECTED BY THE CITY ENGINEER AND THE SUPERINTENDENT OF THE WATER DEPARTMENT. FILL INLETS ARE TO BE PROVIDED IN ORDER TO FILL AND FLUSH MAIN. MAIN LINE VALVES BETWEEN NEW CONSTRUCTION AND THE APPROVED WATER SYSTEM WILL NOT BE OPENED UNTIL THE NEW MAIN IS PROVEN FREE OF BACTERIA AND CONTAMINATION.~~

~~ALL TESTS PERFORMED SHALL BE WITNESSED AND APPROVED BY THE CITY ENGINEER AND THE SUPERINTENDENT OF THE WATER DEPARTMENT OR THEIR APPOINTED REPRESENTATIVE.~~

EXCAVATION AND BACKFILL

EXCAVATION AND BACKFILL: ALL EXCAVATED MATERIAL AND CONSTRUCTION MATERIAL USED SHALL BE DEPOSITED SO AS NOT TO INTERFERE WITH TRAFFIC, PUBLIC WALKWAYS OR INTERFERE WITH NATURAL DRAINAGE COURSES.

NOISE AND DUST CONTROL: CONSTRUCTION ACTIVITIES SHALL BE CONDUCTED SO AS TO ELIMINATE ALL UNNECESSARY NOISE, DUST AND ODORS IN RESIDENTIAL AREAS. OIL OR OTHER MATERIALS THAT MAY CAUSE TRACKING SHALL NOT BE PERMITTED FOR DUST CONTROL.

TRENCH DEPTH: THE CONTRACTOR SHALL EXCAVATE ALL TRENCHES TO A DEPTH SUFFICIENT TO PROVIDE COVER AS FOLLOWS, UNLESS OTHERWISE SPECIFIED BY THE CITY ENGINEER AND THE SUPERINTENDENT OF THE WATER DEPARTMENT:

12" PIPE AND SMALLER	4'9" FROM TOP OF PIPE
16 AND 20 INCH PIPE	4'6" FROM TOP OF PIPE
24 INCH PIPE AND LARGER	4'0" FROM TOP OF PIPE

TRENCH WIDTH: THE CONTRACTOR SHALL EXCAVATE ALL TRENCHES TO A MINIMUM WIDTH TO ACCOMMODATE THE PIPE AND FITTINGS. THE WIDTH SHALL BE MEASURED AT THE TOP OF THE PIPE AND SHALL CONFORM AS FOLLOWS UNLESS OTHERWISE SPECIFIED BY THE CITY ENGINEER AND THE SUPERINTENDENT OF THE WATER DEPARTMENT.

MINIMUM - DIAMETER OF PIPE BARREL PLUS 8 INCHES
MAXIMUM - DIAMETER OF PIPE BARREL PLUS 24 INCHES

BEDDING: THE MAIN SHALL BE INSTALLED SO THAT THE ENTIRE LENGTH OF PIPE SHALL REST ON EITHER STABLE, UNDISTURBED EARTH OR ON A GRANULAR BEDDING MATERIAL SPECIFIED BY THE CITY ENGINEER AND THE SUPERINTENDENT OF THE WATER DEPARTMENT.

FOR LAYING PIPE DIRECTLY ON STABLE, UNDISTURBED EARTH, THE TRENCH BOTTOM SHALL BE SHAPED TO THE CONTOUR OF THE LOWER QUADRANT OF THE PIPE. HOLES SHALL BE PROVIDED AT ALL PIPE JOINTS AND FITTINGS TO ALLOW FOR BELLS AND TO PERMIT PROPER JOINT ALIGNMENT.

FOR LAYING PIPE ON GRANULAR MATERIAL, THE DEPTH OF EXCAVATION SHALL BE A MINIMUM OF 2 INCHES BELOW INTENDED ELEVATION OF THE BOTTOM OF THE PIPE. GRANULAR BACKFILL SHALL BE PLACED IN LAYERS NOT TO EXCEED 4 INCHES AFTER COMPACTION. COMPACTED GRANULAR BACKFILL SHALL BE SHAPED TO FIT THE LOWER QUADRANT OF THE PIPE.

SHEETING: SHEETING IF REQUIRED IN THE OPINION OF THE CITY ENGINEER SHALL BE PROVIDED AND INSTALLED AT THE CONTRACTOR'S EXPENSE. CLOSED SHEET PILING OR WORK BOX SHALL BE USED AT THE CONTRACTOR'S EXPENSE, IF QUICKSAND OR UNSTABLE GROUND IS ENCOUNTERED.

ALL WOOD BLOCKING AND SHEETING SHALL BE REMOVED WHEN BACKFILLING IS HIGH ENOUGH TO PREVENT DAMAGE BY CAVING OR SETTING. NO WOOD BLOCKING IS PERMITTED TO REMAIN UNDER THE MAIN AFTER BACKFILLING.

VOIDS LEFT AFTER PULLING THE SHEETING SHALL BE REFILLED AND COMPACTED WITH GRANULAR MATERIAL BEFORE COMPLETION OR BACKFILLING.

DEWATERING: THE CONTRACTOR SHALL, AT THIS EXPENSE FURNISH ALL PUMPS AND LABOR TO DO ALL PUMPING, BAILING, DITCHING AND DRAINING NECESSARY TO KEEP THE EXCAVATION REASONABLY DRY. THE CONTRACTOR SHALL DISPOSE OF WATER TO A NATURAL DRAINAGE CHANNEL OR STORM SEWER WITHOUT CAUSING ANY PROPERTY DAMAGE.

THRUST BLOCKING: THRUST BLOCKING SHALL BE PROVIDED FOR ALL PLUGS, CAPS, TEES AND BENDS DEFLECTING 22 1/2 DEGREES OR MORE ON 8 INCH DIAMETER OR LARGER MAINS AND FOR THE BOWL AND HEEL OF EACH FIRE HYDRANT. UNLESS ANOTHER METHOD OF BLOCKING IS APPROVED BY THE CITY ENGINEER AND THE SUPERINTENDENT OF THE WATER DEPARTMENT, THE BLOCKING SHALL BE 3000 PSI CONCRETE POURED BETWEEN THE FITTINGS OR HYDRANT AND SOLID EARTH IN A MANNER AS TO PREVENT MOVEMENT OF THE FITTINGS OR HYDRANT.

CLEAN UP: AFTER A SECTION OF MAIN IS TESTED AND ACCEPTED, THE CONSTRUCTION AREA SHALL BE CLEARED OF ALL SURPLUS MATERIAL AND DEBRIS TO THE SATISFACTION OF THE CITY ENGINEER AND THE SUPERINTENDENT OF THE WATER DEPARTMENT.

MAINTENANCE: THE CONTRACTOR SHALL BE RESPONSIBLE FOR THE CONDITION OF THE CONSTRUCTION AREA, MAINS AND APPURTENANCES FOR A PERIOD OF ONE YEAR FROM THE DATE OF FINAL ESTIMATE.

DUCTILE IRON MAINS

VALVES

BUTTERFLY VALVES:

THE VALVES SHALL CONFORM TO AWWA 504 CLASS 150B. DESIGNED FOR BUBBLE TIGHT SHUT OFF AGAINST WORKING PRESSURE OF 150 PSI AND TEST PRESSURES OF 300 PSI.

BODY:

VALVE BODIES AND APPURTENANCES SHALL BE CONSTRUCTED OF CAST IRON AND SHALL BE SUITABLE FOR BURIED SERVICE.

ENDS:

VALVES SHALL BE REQUIRED TO ACCOMMODATE THE PARTICULAR PIPE MATERIAL BEING SPECIFIED ON THE PLANS.

DISCS AND SEATS:

VALVES DISCS OF CAST STEEL, FABRICATED STEEL OR CAST BRONZE ARE NOT ACCEPTABLE.

SEATS BONDED ON THE DISCS ARE NOT ACCEPTABLE.

SHAFT SEATS:

SHAFT SEATS ARE TO BE DESIGNED TO PREVENT WATER AND GRIT FROM ENTERING.

SCALE
MADE E.E.K. DATE 7/85
TRCD. MAG DATE 9/85
CKD. JM DATE 9/85

WOODRUFF, INC.
CONSULTING ENGINEERS
CLEVELAND OHIO

WATERWORK NOTES

F.A.U.S.A. REGION	STATE	PROJECT	
5	OHIO		

LAKE COUNTY
LAK-20-17.14

OPERATORS:

THE VALVE OPERING MECHANISMS SHALL BE DESIGNED FOR CLOCKWISE (RIGHT) OPENING, WHEN INSTALLED WITHIN CITY CORPORATION LIMITS.

INPUT SHAFT IS TO BE OPERATED BY A 2 INCH SQUARE OPERATING NUT.

~~GATE VALVES:~~

~~THE VALVES SHALL CONFORM TO AWWA C500 SPECIFICATIONS FOR WATER VALVES. THEY SHALL BE OF A DESIGN TO SHUT OFF AGAINST WORKING PRESSURES OF 150 PSI AND TEST PRESSURES OF 300 PSI.~~

~~BODY:~~

~~VALVE BODIES AND APPURTENANCES SHALL BE CONSTRUCTED OF CAST IRON AND SHALL BE SUITABLE FOR BURIED SERVICE.~~

~~ENDS:~~

~~VALVES SHALL BE REQUIRED TO ACCOMMODATE THE PARTICULAR PIPE MATERIAL BEING SPECIFIED ON THE PLANS.~~

~~DISCS AND SEATS:~~

~~ALL MANUALLY OPERATED GATE VALVES 3" AND LARGER SHALL BE DOUBLE DISC, BRONZE MOUNTED, PARALLEL SEATED, DESIGNED TO FORCIBLY SEAT THE DISCS AFTER THEY HAVE BEEN POSITIONED.~~

~~SHAFT SEALS:~~

~~VALVES SHALL BE DESIGNED WITH NON-RISING STEMS WITH RUBBER "O" RING PACKING SEALS.~~

~~OPERATORS:~~

~~THE VALVE OPERATING MECHANISMS SHALL BE DESIGNED FOR CLOCKWISE (RIGHT) OPENING WHEN INSTALLED WITHIN CITY CORPORATION LIMITS. INPUT SHAFT IS TO BE OPERATED BY A 2 INCH SQUARE OPERATIN NUT.~~

TAPPING SLEEVES AND VALVES:

ALL TAPPING SLEEVES SHALL BE CAST IRON AND SHALL CONFORM TO THE LATEST AWWA SPECIFICATIONS. THE TAPPING SLEEVE, TOGETHER WITH THE TAPPING VALVE, SHALL BE TESTED AT 150 PSI FOR VISIBLE LEAKAGE BEFORE THE MAIN IS TAPPED (A CAST IRON PIPE PLUG IN THE VALVE BONNET SHALL BE FURNISHED FOR THIS PURPOSE).

TAPPING SLEEVES SHALL BE TWO PIECE WITH MECHANICAL JOINT ENDS, SO DESIGNED TO ASSURE UNIFORM GASKET PRESSURE AND PERMIT CENTERING OF THE SLEEVE ON THE MAIN.

TAPPING VALVES SHALL HAVE A FLANGE ON ONE END FOR BOLTING TO THE TAPPING SLEEVE AND A MECHANICAL JOINT TYPE END CONNECTION ON THE OUTLET WITH STANDARD SLOTTED FLANGE FOR CONNECTION TO THE TAPPING MACHINE. THE VALVE OPERATING MECHANISMS SHALL BE DESIGNED FOR CLOCKWISE (RIGHT) OPENING WHEN INSTALLED WITHIN CITY CORPORATION LIMITS.

VALVE BOXES:

ALL VALVES SHALL BE PROVIDED WITH AN APPROPRIATE SIZE VALVE BOX. VALVE BOXES SHALL BE THREE PIECE, HEAVY PATTERN CAST IRON ADJUSTABLE LENGTH SCREW TYPE AND OF A LENGTH TO EXTEND FROM THE VALVE TO FINISH GRADE. VALVE BOXES LOCATED IN TRAFFIC AREAS SHALL BE SUPPORTED TO AVOID ANY LOAD TRANSFER TO THE VALVE BODY. TOPS SHALL BE SET AT ESTABLISHED GRADE AND SHALL BE MARKED "WATER".

VALVE BASE	BASE
4" AND SMALLER	ROUND, 8" IN HEIGHT, 10 7/8 BOTTOM DIAMETER
6" AND 8"	ROUND, 11" IN HEIGHT, 14 7/8 BOTTOM DIAMETER
10" THROUGH 16"	OVAL, 9½" IN HEIGHT, 21" BY 12½" BOTTOM DIAMETER
18" THROUGH 20"	OVAL, 10" IN HEIGHT, 25½" BY 16" BOTTOM DIAMETER
24" AND LARGER	DOME, 5" IN HEIGHT, 15" DIAMETER AND 17" SQUARE FLANGE AT BOTTOM

~~ALL GATE VALVES 16" AND LARGER SHALL BE PROVIDED WITH A BY-PASS VALVE OF A SIZE APPROVED BY THE CITY ENGINEER AND THE SUPERINTENDENT OF THE WATER DEPARTMENT.~~

~~ITEM SPECIAL - RELOCATED WATER MAIN~~

~~DUCTILE IRON PIPE AND FITTINGS~~

~~(A) ALL DUCTILE IRON PIPE SHALL BE MANUFACTURED IN ACCORDANCE WITH ANSI A21.50- AND ANSI A21.51-65 AWWA CC150- AND C151- RESPECTIVELY. ALL DUCTILE IRON FITTINGS SHALL BE MANUFACTURED IN ACCORDANCE WITH ANSI A21.10- OR AWWA C110-55. DUCTILE IRON SHALL HAVE A MINIMUM OF 60,000 PSI ULTIMATE TENSILE STRENGTH. 42,000 PSI YIELD STRENGTH AND 10% ELONGATION. THE CHEMICAL ANALYSIS SHALL BE AS FOLLOWS: CARBON 3% MINIMUM; PHOSPHOROUS 0.08% MAXIMUM; AND SILICON 2.75% MAXIMUM. THE THICKNESS OF THE CENTRIFUGALLY CAST DUCTILE IRON PIPE SHALL CONFORM TO THE FOLLOWING:~~

~~SIZE~~	~~WORKING PRESSURE~~	~~STANDARD THICKNESS~~	~~CLASS~~
~~12"~~	~~350 PSI~~	~~0.52~~	~~57 WITH ZERO MINUS TOLERANCE~~

~~(B) ALL FITTINGS, SUCH AS BENDS, TEES, ETC. SHALL HAVE BELL AND BELL OR BELL AND SPIGOT ENDS WITH BOLTLESS RESTRAINED SLIP-ON TYPE JOINT WITH COMPRESSED RUBBER RING INSERTS.~~

~~(C) ALL PIPE SHALL HAVE BELL AND SPIGOT ENDS FOR BOLTLESS RESTRAINED SLIP-ON TYPE JOINT WITH COMPRESSED RUBBER RING INSERTS UNLESS OTHERWISE SHOWN. ALL PIPE AND FITTINGS SHALL BE CEMENT LINED.~~

~~(D) GASKETS SHALL BE OF RUBBER OR OTHER EQUALLY EFFECTIVE PROTECTION AGAINST UNEVEN DISTORTION OF THE GASKET.~~

~~(E) WHERE FITTINGS ARE SHOWN WHICH ARE NOT COVERED BY THE ABOVE SPECIFICATIONS, THEY IN SUCH PARTICULAR AS ARE LACKING THEREON SHALL CONFORM TO THE DIMENSIONS AND OTHERWISE MEET THE SPECIFICATIONS FOR THE RESPECTIVE TYPE WHICH ARE CARRIED IN THE LATEST REVISIONS TO THE CURRENT EDITION OF THE "HANDBOOK OF CAST IRON PIPE" BY THE CAST IRON PIPE RESEARCH ASSOCIATION OR WHICH ARE OTHERWISE SHOWN ON THE CONTRACT DRAWINGS.~~

~~(F) WHEREVER CHANGES IN LINE AND GRADES OF THE MAIN AS SHOWN ON THE DRAWINGS ARE NOT STANDARD FITTING DEFLECTIONS, THE CONTRACTOR WILL BE PERMITTED TO SUBMIT DETAILS USING COMBINATIONS OF STANDARD FITTINGS AND SMALL DEFLECTIONS (NOT TO EXCEED A MAXIMUM OF ONE-HALF (1/2) INCH JOINT OPENING) IN THE ADJOINING LENGTHS OF PIPE. PIPE TO THE INSTALLED WITH AIR RELIEF VALVES OR DRAINS SHALL BE CAST WITH BOSSES THEREON, AND DRILLED AND TAPPED FOR TWO (2) INCH CONNECTIONS, AND PLUGGED IN THE SHOP WITH CAST IRON THREADED PLUGS, BEFORE SHIPMENT.~~

~~(G) PLUGS FOR BELL AND SPIGOT PIPE AND CAPS FOR LUGGED PIPE SHALL BE FURNISHED WITH TWO (2) PLUGGED TWO (2") INCH TAPS FOR DRAIN AND AIR RELIEF VALVE CONNECTIONS.~~

~~(H) CLOSURE PIECES SHALL BE ACCURATELY MEASURED AND CUT IN THE FIELD AND INSTALLED USING SOLID TYPE PATTERN SLEEVES AS SHOWN OR AS REQUIRED, WITH MINIMAL SPACE AT ENDS TO PERMIT CLOSURE PIECE INSERTION ONLY.~~

~~(I) TESTS, INSPECTION, REPORTS AND ANALYSES OF TESTS OF SAMPLES FOR ALL MATERIALS SHALL BE FURNISHED AS SET FORTH ELSEWHERE IN THESE SPECIFICATIONS.~~

~~(J) BITUMASTIC COATING SHALL BE APPLIED ON THE EXTERIOR OF ALL DUCTILE IRON PIPE AND FITTINGS IN ACCORDANCE WITH AWWA SPECIFICATIONS. ALL DUCTILE IRON WATER MAIN PIPE AND FITTINGS SHALL BE GIVEN, IN ADDITION TO THAT SPECIFIED, A COATING OF FOUR (4) MILS ADDITIONAL THICKNESS, OR PROTECTION WITH POLYETHYLENE ENCASEMENT IN ACCORDANCE WITH ANSI A-21.5-72 (AWWAC 105-72), CLASS "C" INSTALLATION METHOD "B". ALL FITTING SHALL HAVE ANSI A21.5-72 PROTECTION.~~

~~CEMENT LINING~~

~~(A) ALL DUCTILE IRON PIPE AND FITTINGS, SHALL BE GIVEN A CEMENT MORTAR LINING AT THE POINT OF MANUFACTURE. THE LINING SHALL CONFORM TO THE AMERICAN NATIONAL STANDARD ANSI A21.4 (AWWA C104) AND ALL SUBSEQUENT AMENDMENTS THERETO.~~

SCALE
MADE CER DATE 7/85
TRCD. MAG DATE 7/85
CKD. JM DATE 7/85

WOODRUFF, INC.
CONSULTING ENGINEERS
CLEVELAND OHIO

U.S.20 OVER GRAND RIVER

WATERWORK NOTES

~~(C) VICTAULIC TYPE COUPLINGS~~

~~WHERE SHOWN ON THE DRAWINGS OR WHERE REQUIRED, THE CONTRACTOR SHALL FURNISH AND INSTALL VICTAULIC TYPE COUPLINGS STYLE-77 FOR CONNECTION OF STEEL PIPES. STEEL PIPE SHALL BE FABRICATED AND GROOVED AS INDICATED ON THE DRAWINGS.~~

~~COUPLINGS SHALL BE COMPOSED OF MALLEABLE IRON HOUSINGS HELD TOGETHER WITH STEEL BOLTS, HEAT TREATED AND WITH A CONTINUOUS HOLLOW, MOLDED RUBBER SEALING RING, OF SUCH TYPE THAT THE SEAL BECOMES TIGHT AS THE PRESSURE WITHIN THE PIPE INCREASES. THE JOINTS SHALL BE CONSTRUCTED AND INSTALLED AND BE EQUAL IN ALL RESPECTS TO THOSE MANUFACTURED BY THE VICTAULIC COMPANY OF AMERICA. MALLEABLE HOUSING SHALL CONFORM TO THE "STANDARD SPECIFICATIONS FOR MALLEABLE IRON CASTINGS, ASTM DESIGNATION: A-47." BOLTS SHALL BE MANUFACTURED BY THE COUPLING MANUFACTURER AND SHALL BE CADMIUM PLATED STEEL BOLTS HAVING 100,000 PSI TENSILE STRENGTH.~~

~~ALL METAL PARTS OF THE COUPLINGS SHALL BE COATED AT THE SHOP WITH ONE COAT OF BITUMINOUS PRIMER FURNISHED BY THE SAME MANUFACTURER WHO FURNISHED THE COATINGS AS SPECIFIED UNDER "PAINTING".~~

~~(D) EXPANSION JOINT ASSEMBLY~~

~~THE CONTRACTOR SHALL PROVIDE SHOP DRAWINGS TO THE ENGINEER FOR APPROVAL OF THE EXPANSION JOINT ASSEMBLY.~~

~~THE JOINT ASSEMBLY SHALL BE "DRESSER STLE 63 TYPE 1" SLIP TYPE WITH AN 8-IN. TRAVERSE OR APPROVED EQUAL. THE JOINT ASSEMBLY SHALL INCLUDE ALL MATERIALS, CADMIUM PLATED BOLTS, NUTS AND WASHERS: WELDED NECK FLANGES A.S.A. 150# AND GASKETS. NO FIELD WELDING OF GALVANIZED STEEL PIPE WILL BE PERMITTED.~~

~~PIPE SUPPORT ASSEMBLIES~~

~~(A) THE CONTRACTOR SHALL PROVIDE SHOP DRAWINGS TO THE ENGINEER FOR APPROVAL OF THE PIPE SUPPORT ASSEMBLIES.~~

~~(B) PIPE SUPPORT ASSEMBLIES SHALL BE COMPLETE INCLUDING ALL MATERIALS, CADMIUM PLATED SHOULDER AND CLAMP BOLTS, WASHERS AND NUTS. THE SUPPORT ASSEMBLY CLAMP, SEAT PLATE AND SHIMS SHALL ALL BE HOT DIPPED GALVANIZED AFTER FABRICATION PER ASTM A-123 LATEST REVISIONS. NO FIELD WELDING OF GALVANIZED STEEL PIPE WILL BE PERMITTED.~~

~~INSULATION, APPURTENANCES AND FASTENINGS~~

~~(A) THE CONTRACTOR SHALL FURNISH AND INSTALL INSULATION SLEEVE PACKING, APPURTENANCES AND FASTENINGS AS CALLED FOR ON THE WATERWORK DETAIL PLANS.~~

~~(B) THE VOID BETWEEN THE PIPE SLEEVE AND THE WATERMAIN THROUGH THE BRIDGE ABUTMENTS SHALL BE FILLED WITH JUTE PACKING AND SEALED AT BOTH ENDS WITH THREE (3") INCHES OF HOT POURED LEAD.~~

ITEM SPECIAL - EXTEND HYDRANT BRANCH AND ADJUST HYDRANT AND VALVE BOX TO GRADE

(A) WORK INCLUDED

THE CONTRACTOR SHALL FURNISH ALL MATERIALS, TOOLS, LABOR, EQUIPMENT AND INCIDENTALS TO EXTEND HYDRANT BRANCH AND ADJUST 6" HYDRANT AND VALVE BOX TO GRADE AS REQUIRED BY THESE PLANS.

(B) VERTICAL SETTING

CONTRACTOR SHALL ADJUST THE HYDRANT NOZZLE TO BE WITHIN TWELVE (12) INCHES MINIMUM TO TWENTY (20) INCHES MAXIMUM DISTANCE ABOVE ADJACENT PROPOSED CURB ELEVATION. RESET THE FROST JACKET FOUR (4) INCHES ABOVE FINISHED GRADE ELEVATION.

(C) BRANCH EXTENSION WILL BE DUCTILE IRON PIPE OF SAME SIZE AS THE EXISTING HYDRANT.

(D) CLEANING

THE HYDRANT SHALL BE THOROUGHLY CLEANED OF DIRT AND FOREIGN MATTER AND PAINTED AS DIRECTED BY THE ENGINEER.

(E) PAYMENT

THE UNIT PRICE STIPULATED TO BE PAID FOR EACH ITEM SPECIAL - "EXTEND HYDRANT BRANCH AND ADJUST HYDRANT AND VALVE BOX TO GRADE" SHALL INCLUDE REMOVING, ADJUSTING AND SETTING HYDRANT TO GRADE, RECONNECTING TESTING, PAINTING, EXCAVATING BACKFILLING AND ADJUSTING VALVE BOX TO GRADE, FURNISHING OF ALL LABOR, MATERIALS, TOOLS AND INCIDENTALS NECESSARY TO COMPLETE THE WORK AS SPECIFIED OR SHOWN.

PAINTING

AFTER INSTALLATION, ALL DAMAGED COATINGS AND ALL BOLTS SHALL BE CLEANED AND PAINTED WITH THREE (3) FIELD COATS OF INERTOL 66 OR BITUMASTIC 50 OR EQUIVALENT.

~~BRASS PIPE AND FITTINGS~~

~~(A) ALL BRASS PIPE AND FITTINGS SHALL BE EXTRA STRONG, 2-INCH PIPE SIZE AND THE PIPE SHALL CONFORM TO A.S.T.M. SPECIFICATIONS B 43-42. FITTINGS SHALL BE EXTRA STRONG WEIGHT AND SHALL HAVE SOUND, WELL FITTING THREADS.~~

~~GALVANIZED BLACK IRON PIPE AND FITTINGS~~

~~(A) ALL GALVANIZED BLACK IRON PIPE, NIPPLES AND COUPLINGS SHALL BE EXTRA STRONG BLACK IRON PIPE A.S.T.M. DESIGNATION A-120. THE FITTINGS SHALL BE BEADED, OF MALLEABLE IRON, EXTRA HEAVY WEIGHT. ALL PIPE AND FITTINGS SHALL BE HOT DIPPED ZINC COATED INSIDE AND OUTSIDE, AND SHALL HAVE SOUND, WELL-FITTING THREADS.~~

~~ERECTION~~

~~(A) ALL PIPE SHALL BE CAREFULLY PLACED TO THE PROPER LINES AND GRADES, AND SHALL BE CONNECTED UP, UNLESS OTHERWISE SHOWN, WITH SCREW FITTINGS. SCREW JOINTS SHALL BE MADE TIGHT WITH A GRAPHITE PASTE AND SCREWED HOME. A LIBERAL NUMBER OF UNIONS SHALL BE USED TO PERMIT THE READY REMOVAL OF ANY SECTION.~~

~~FIRE HYDRANTS~~

~~FIRE HYDRANTS SHALL CONFORM TO A.W.W.A. SPECIFICATIONS C502.~~

~~ALL HYDRANTS SHALL HAVE A 6 INCH HUBBED INLET CONNECTION, A 5¼ INCH, UPWARD CLOSING HORIZONTAL SEAT, COMPRESSION TYPE MAIN VALVE AND SHALL OPEN BY TURNING THE OPERATOR NUT CLOCKWISE (RIGHT), WHEN INSTALLED WITHIN CITY CORPORATION LIMITS. HYDRANTS SHALL HAVE A FLANGE AT 6" ABOVE GROUND LINE AND A BURY DEPTH OF FIVE FEET. BARREL EXTENSIONS SHALL BE PROVIDED AS REQUIRED.~~

~~EACH HYDRANT SHALL HAVE A BREAKABLE FLANGE AND STEM COUPLING CONSTRUCTION SO THE VALVE REMAINS CLOSED IF THE BARREL IS BROKEN.~~

~~EACH HYDRANT SHALL BE EQUIPPED WITH TWO "2½" HOSE NOZZLES HAVING "NATIONAL STANDRD" THREADS (7½" THREADS PER INCH) AND A 4" PUMPER NOZZLE WITH PAINESVILLE STANDARD THREADS (5 1/8" O.D. WITH 4 THREADS PER INCH). ALL OUTLETS SHALL BE PROVIDED WITH CAPS AND WASHERS. THE CAP NUTS SHALL BE PENTAGON SHAPED, NATIONAL STANDARD AND 1½ INCH FROM POINT TO POINT.~~

~~EACH HYDRANT SHALL BE INSTALLED WITH A 6" WATCH VALVE A MINIMUM OF 24" FROM HYDRANT. WATCH VALVE BOX SHALL BE SET FOR FINISH GRADE BUT NOT IN DITCH LINE.~~

~~ALL JOINTS ASSOCIATED WITH HYDRANT INSTALLATIONS SHALL BE MECHANICAL JOINT, PROPERLY BLOCKED, TARRED AND WRAPPED WITH MATERIAL CONFORMING TO A.S.A. SPECIFICATIONS A21.5 (A.W.W.A. C105).~~

~~A HYDRANT WRENCH SHALL BE PROVIDED WITH EACH FIVE (5) FIRE HYDRANTS OR LESS INSTALLED.~~

F.A.H.W.A. REVISION	STATE	PROJECT	
5	OHIO		

76
86

LAKE COUNTY

LAK-20-17.14

QUANTITY CALCULATIONS

BY C.E.R. DATE 9/85

CHKD. I.M. DATE Sept. 1985

WOODRUFF, INC.

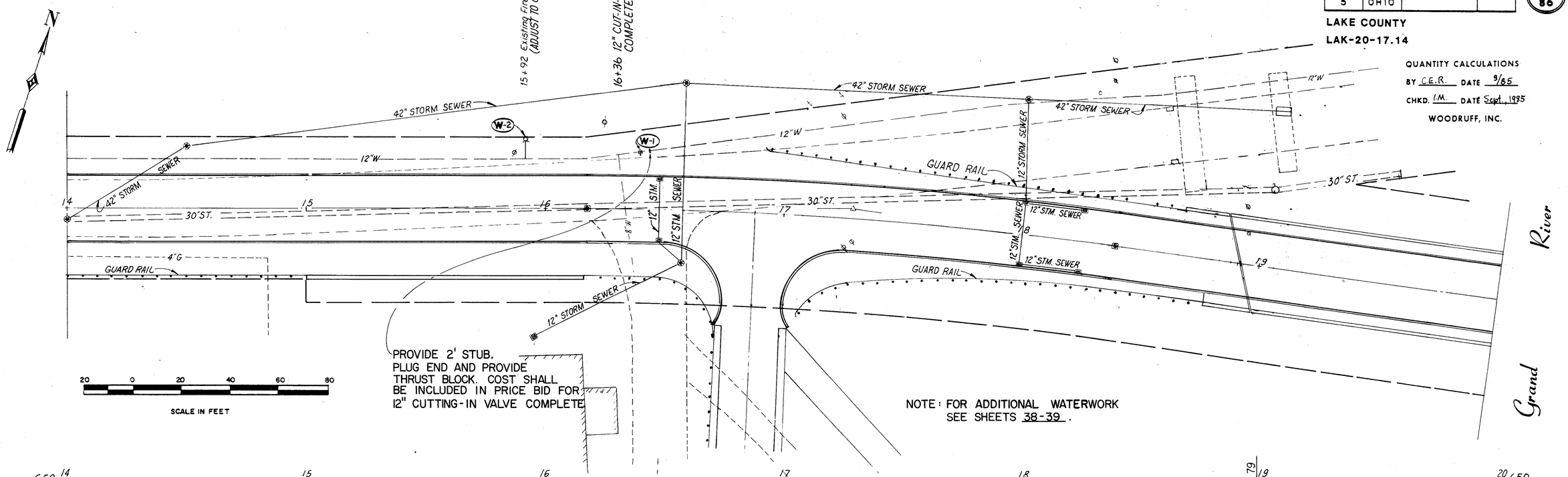

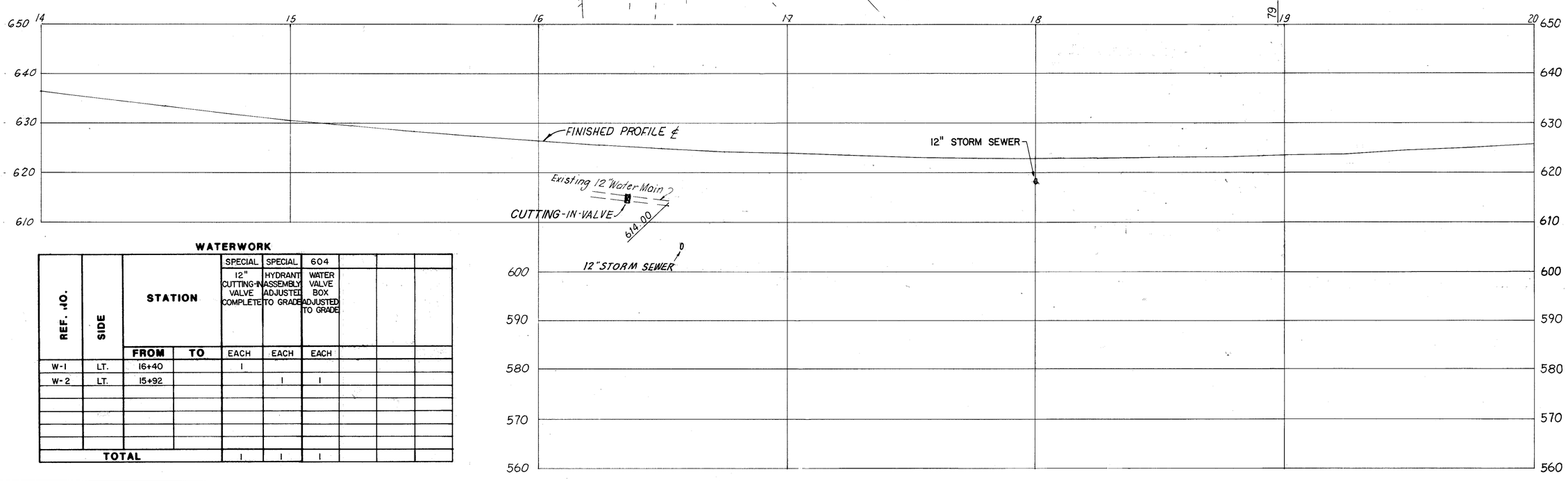

WATERWORK

REF. NO.	SIDE	STATION FROM	STATION TO	SPECIAL 12" CUTTING-IN VALVE COMPLETE	SPECIAL HYDRANT ASSEMBLY ADJUSTED TO GRADE	604 WATER VALVE BOX ADJUSTED TO GRADE			
				EACH	EACH	EACH			
W-1	LT.	16+40		1					
W-2	LT.	15+92			1	1			
TOTAL				1	1	1			

SCALE ____
MADE C.E.R. DATE 9/85
TRCD. MAG. DATE 9/85
CKD. I.M. DATE 9/85

WOODRUFF, INC.
CONSULTING ENGINEERS
CLEVELAND OHIO

U.S. 20 OVER GRAND RIVER

F.A.H.W.A. REGION	STATE	PROJECT	
5	OHIO		

79 / 86

LAKE COUNTY

LAK-20-17.14

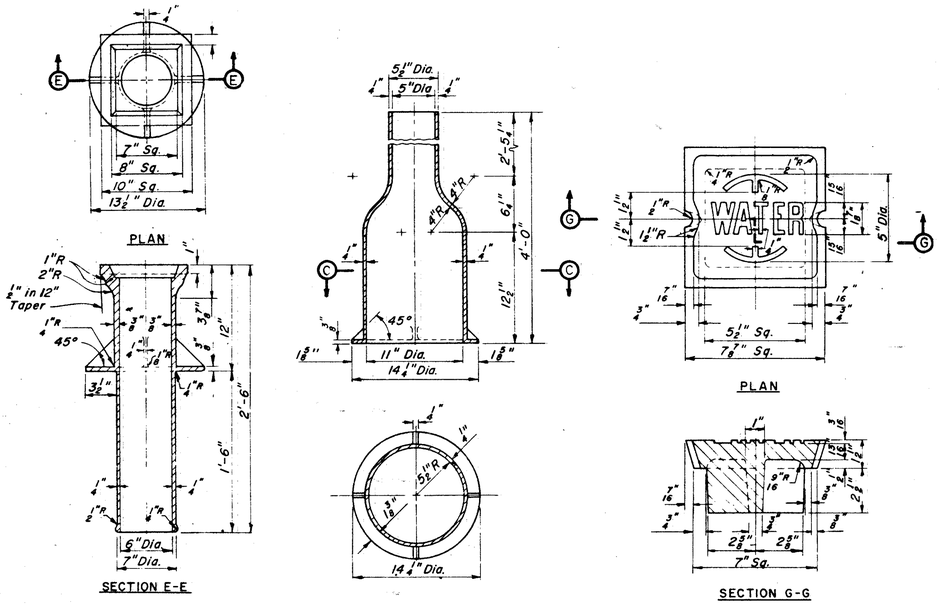

TOP WITH SQUARE HEAD No. 4
Estimated Weight 85 lbs.

BASE No. 4
Estimated Weight 79 lbs.

SQUARE COVER FOR No. 4 TOP
Estimated Weight 23 lbs.

STANDARD DETAILS - VALVE BOX No. 4

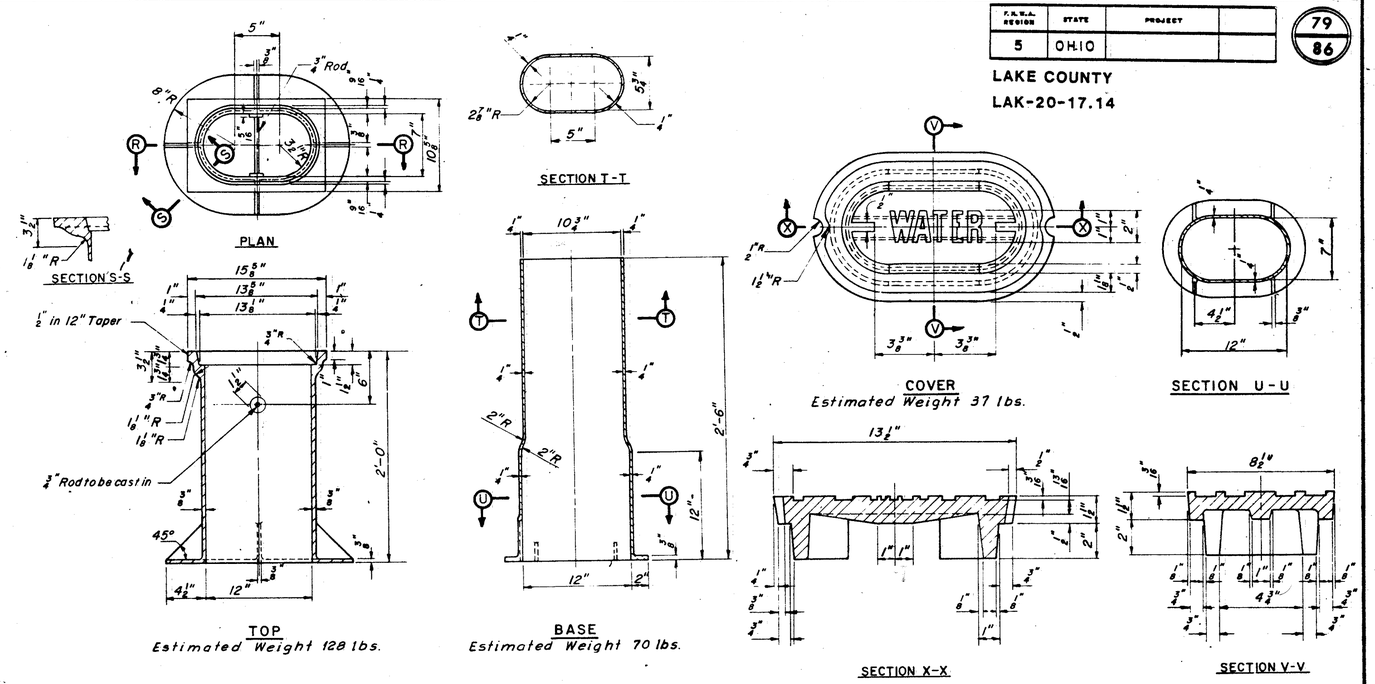

TOP
Estimated Weight 128 lbs.

BASE
Estimated Weight 70 lbs.

COVER
Estimated Weight 37 lbs.

STANDARD DETAILS - AIR COCK BOX No. 6

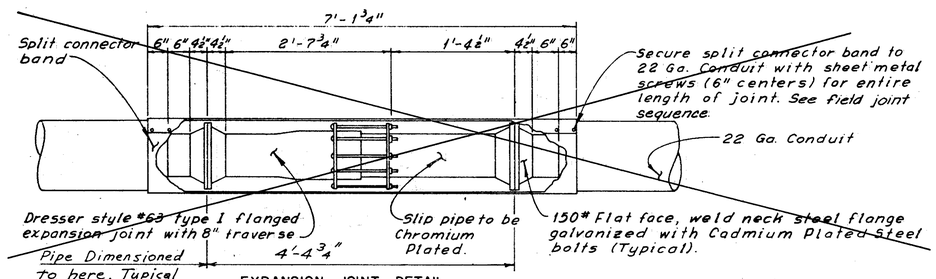

EXPANSION JOINT DETAIL

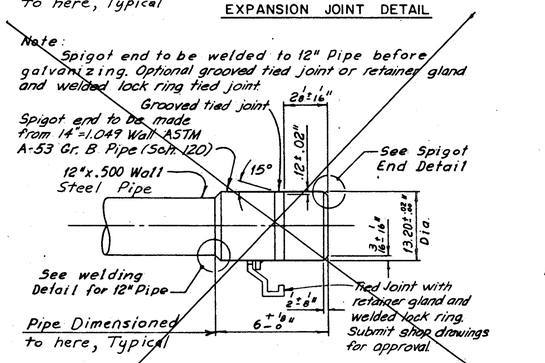

CONNECTION DETAIL FOR 12" PIPE

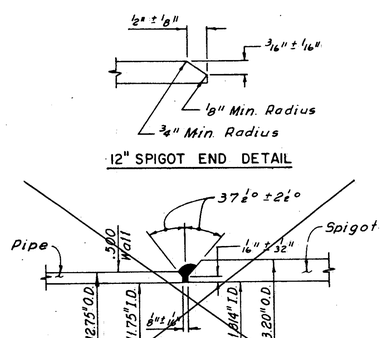

WELDING DETAIL FOR 12" PIPE

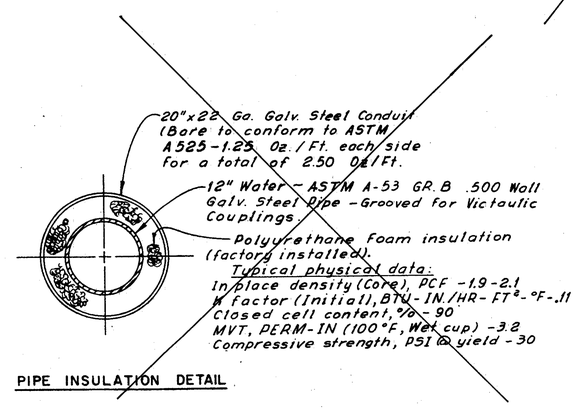

PIPE INSULATION DETAIL

MISCELLANEOUS DETAILS
No Scale

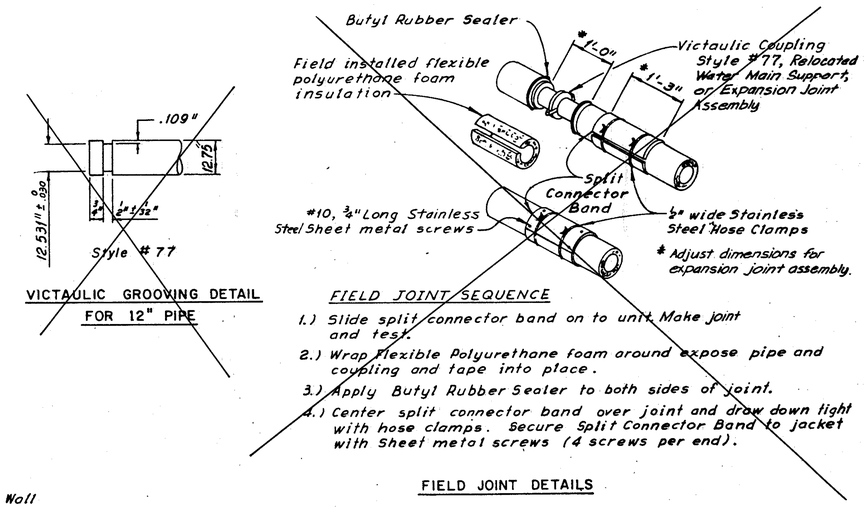

VICTAULIC GROOVING DETAIL FOR 12" PIPE

FIELD JOINT SEQUENCE

1.) Slide split connector band on to unit. Make joint and test.
2.) Wrap flexible Polyurethane foam around expose pipe and coupling and tape into place.
3.) Apply Butyl Rubber Sealer to both sides of joint.
4.) Center split connector band over joint and draw down tight with hose clamps. Secure Split Connector Band to jacket with sheet metal screws (4 screws per end).

FIELD JOINT DETAILS

SCALE AS SHOWN	WOODRUFF, INC.	
MADE CEB DATE 9/65	CONSULTING ENGINEERS	
TRCD MAC DATE 9/65	CLEVELAND OHIO	
CKD. JM DATE 9/65		

U.S. 20 OVER GRAND RIVER

F.A.H.W.A. REGION	STATE	PROJECT	
5	OHIO		

81
86

LAKE COUNTY

LAK-20-17.14

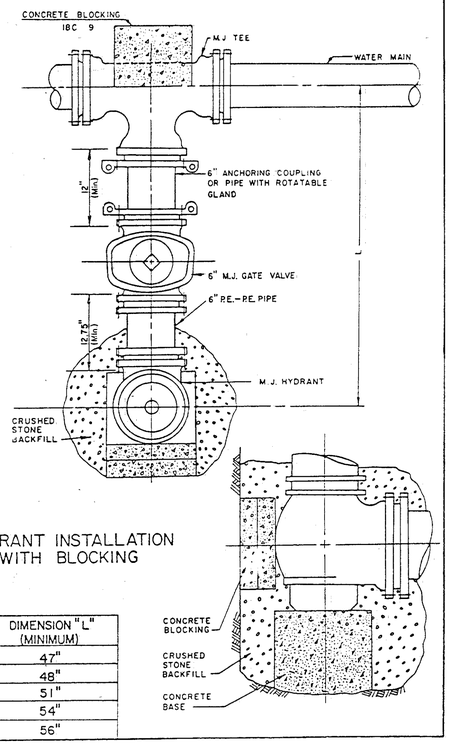

HYDRANT INSTALLATION WITH BLOCKING

WATER MAIN	DIMENSION "L" (MINIMUM)
6"	47"
8"	48"
12"	51"
16"	54"
20"	56"

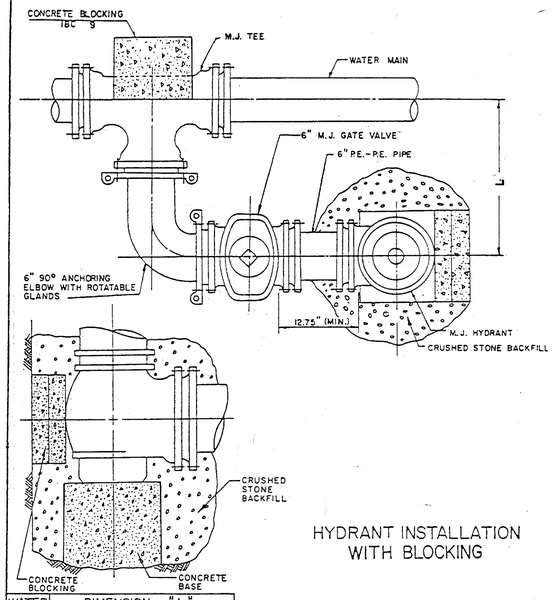

HYDRANT INSTALLATION WITH BLOCKING

WATER MAIN	DIMENSION "L" TYPE	TYPE MOD.
6"	24"	19"
8"	25"	20"
12"	28"	23"
16"	31"	26"
20"	33"	28"

SIZE OF PIPE	DEGREE OF BEND 11¼° L"	W"	H"	22½° L"	W"	H"	45° L"	W"	H"
6"	12	48	18	15	43	36	30	55	24
8"	12	63	24	18	57	34	36	57	33
12"	20	56	36	37	62	37	48	62	51
16"	31	65	38	60	65	39	65	65	65
20"	45	70	40	56	70	60	72	77	78
24"	41	76	54	67	74	69	88	84	84

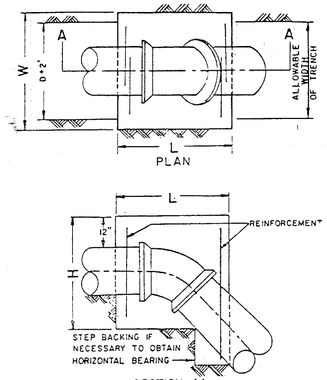

CONCRETE BACKING FOR VERTICAL BENDS

1. BACKING DESIGNED FOR 3000 POUNDS PER SQUARE FOOT SOIL BEARING AND 150 POUNDS PER SQUARE INCH INTERNAL PRESSURE.
2. PROVIDE MINIMUM CONCRETE REINFORCEMENT OF 2 PAIR OF TWO #5 "U" BARS AT 12" C/C.
3. CENTER BACKING ON BEND.

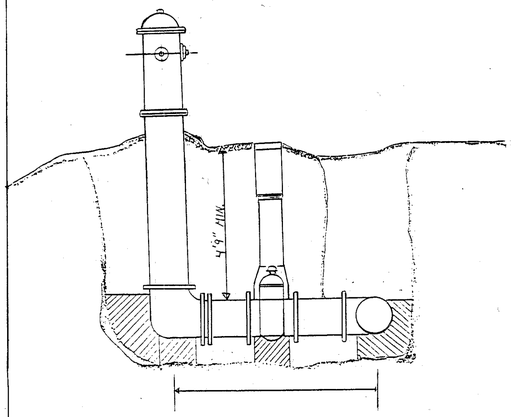

NOTE:
BEFORE CUTTING EX. WATER LINE, THE TWO NIPPLES SHALL BE CONNECTED TO THE BUTTERFLY VALVE USING LEAD JOINTS. FINAL CONNECTIONS SHALL BE MADE WITH COUPLING AS SHOWN.

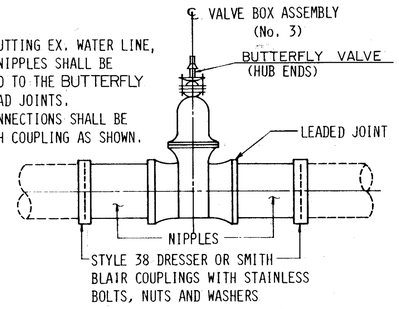

METHOD OF CONSTRUCTION

DETAIL FOR CUTTING-IN VALVE

NOT TO SCALE

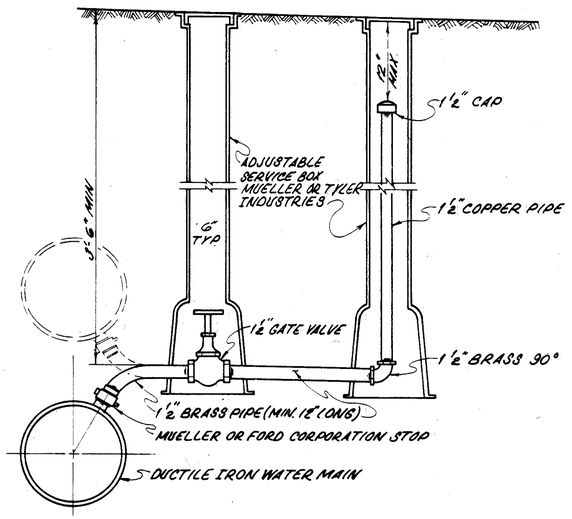

1 1/2" AIR RELIEF OR DRAIN VALVE AND BOX COMPLETE

NO SCALE

PIPE DIA. IN.	90° BEND REQ'D THRUST BLOCKING AREA & VOL. (AREA – SQ. FT. / VOL. – CU. YD.) SOIL BEARING CAPACITY P.S.F. 1000	3000	5000	45° BEND REQ'D THRUST BLOCKING AREA & VOL. (AREA – SQ. FT. / VOL. – CU. YD.) SOIL BEARING CAPACITY P.S.F. 1000	3000	5000	22½° BEND REQ'D THRUST BLOCKING AREA & VOL. (AREA – SQ. FT. / VOL. – CU. YD.) SOIL BEARING CAPACITY P.S.F. 1000	3000	5000	DEAD END OR TEE REQ'D THRUST BLOCKING AREA & VOL. (AREA – SQ. FT. / VOL. – CU. YD.) SOIL BEARING CAPACITY P.S.F. 1000	3000	5000
4	4.90 / 0.14	1.63 / 0.09	0.98 / 0.08	2.70 / 0.12	0.90 / 0.08	0.54 / 0.06	1.40 / 0.14	0.46 / 0.09	0.28 / 0.06	3.50 / 0.12	1.16 / 0.08	0.70 / 0.06
6	10.20 / 0.22	3.40 / 0.14	2.04 / 0.09	5.50 / 0.15	1.83 / 0.10	1.10 / 0.07	2.80 / 0.15	0.93 / 0.10	0.56 / 0.07	7.20 / 0.17	2.40 / 0.11	1.44 / 0.07
8	17.70 / 0.35	5.54 / 0.23	3.54 / 0.15	9.60 / 0.23	3.20 / 0.15	1.92 / 0.09	4.80 / 0.20	1.60 / 0.13	0.96 / 0.09	12.50 / 0.25	4.18 / 0.18	2.50 / 0.14
10	28.90 / 0.54	9.60 / 0.35	5.78 / 0.23	15.70 / 0.34	5.23 / 0.20	3.14 / 0.13	7.90 / 0.53	2.63 / 0.34	1.58 / 0.22	20.40 / 0.38	6.80 / 0.25	4.08 / 0.18
12	41.10 / 1.31	13.70 / 0.85	8.22 / 0.55	22.30 / 0.75	7.43 / 0.49	4.46 / 0.32	11.30 / 0.62	3.76 / 0.40	2.28 / 0.26	29.10 / 0.97	9.70 / 0.63	5.82 / 0.42
14	55.80 / 1.70	18.60 / 1.11	11.16 / 0.72	30.20 / 0.98	10.06 / 0.64	6.04 / 0.42	15.30 / 0.74	5.10 / 0.48	3.06 / 0.31	39.50 / 1.22	13.16 / 0.79	7.90 / 0.51
16	72.20 / 2.14	24.08 / 1.39	14.44 / 0.90	39.10 / 1.21	13.03 / 0.79	7.82 / 0.51	19.80 / 1.17	6.60 / 0.76	3.96 / 0.49	51.10 / 1.54	17.03 / 1.00	10.22 / 0.65

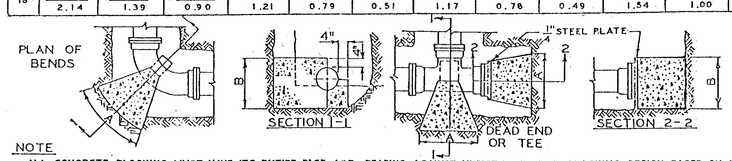

NOTE

ALL CONCRETE BLOCKING MUST HAVE ITS ENTIRE FACE-AXD- BEARING AGAINST UNDISTURBED SOIL. BLOCKING DESIGN BASED ON WORKING PRESSURE OF 90 P.S.I. + 100 P.S.I. WATER HAMMER.—SAND ----1000 P.S.F., SAND & GRAVEL----3000 P.S.F., SHALE----5000 P.S.F. (BEARING CAPACITY)

THRUST BLOCKING DETAILS — FOR BENDS IN HORIZONTAL PLANE

SCALE	
MADE	DATE 9/85
TRCD	DATE 9/85
CKD.	DATE 9/85

WOODRUFF, INC.

CONSULTING ENGINEERS

CLEVELAND OHIO

U.S. 20 OVER GRAND RIVER

CC-4 #3

STATE OF OHIO
DEPARTMENT OF TRANSPORTATION
U.S. ROUTE 20 BRIDGE OVER THE GRAND RIVER

BRF-69(16)

F.H.W.A. REGION	STATE	PROJECT	
5	OHIO	BRF-69(16)	

82
86

LAKE COUNTY
LAK-20-17.14

CONVENTIONAL SIGNS

PROPERTY LINE — IN EXISTING FENCE
COMMON OWNERSHIP LINE
ORIGINAL TOWNSHIP LOT LINE
CORPORATION LINE
CENTER LINE
RIGHT OF WAY LINE EXISTING — PROPOSED — TEMPORARY
LIMITED ACCESS LINE (EXISTING)
LIMITED ACCESS AND RIGHT OF WAY LINE (EXISTING)
SEWER EASEMENT LINE
FENCE LINE EXISTING — PROPOSED
GUARD RAIL EXISTING — PROPOSED
RAILROAD EXISTING — PROPOSED
TREES
UTILITY POLES LIGHT — TELEPHONE — POWER — COMBINATION
OIL LINE
WATER LINE EXISTING — PROPOSED
GAS LINE
CONDUITS ELECTRICAL — TELEPHONE
FIRE HYDRANT EXISTING — PROPOSED
STORM SEWER EXISTING — PROPOSED
SANITARY SEWER EXISTING — PROPOSED
CATCH BASIN OR INLET EXISTING — ADJUSTED TO GRADE — PROPOSED
MANHOLE EXISTING — ADJUSTED TO GRADE — PROPOSED — STORM — SANITARY
UTILITY VALVE
EXISTING SIGNS

INDEX OF SHEETS

TITLE	SHEET
TITLE PAGE	
CENTERLINE SURVEY	1
PROPERTY MAP	2
SUMMARY OF ADDITIONAL RIGHT OF WAY	3
RIGHT OF WAY MAP	4

BEGIN PROJECT STA. 13+90.00

END PROJECT STA. 27+65.00

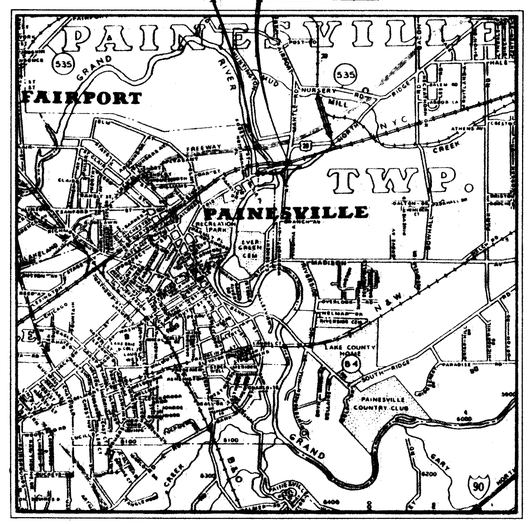

N

LOCATION MAP

SCALE IN MILES

1 0 1

Portion To Be Improved
State & Federal
Other Roads

SCALES

Plan Approach Roadways 0 50 100

48 HOURS
BEFORE YOU DIG
CALL
OHIO UTILITIES
PROTECTION SERVICE
800-362-2764

Approved _____
Date _____ District Deputy Director of Transportation

Approved _____
Date _____

Project:
Date of Letting _____ 19__, Contract No. _____

PLANS PREPARED BY:

WOODRUFF, INC.
CONSULTING ENGINEERS
CLEVELAND OHIO

DEPARTMENT OF TRANSPORTATION
FEDERAL HIGHWAY ADMINISTRATION

APPROVED:

DIVISION ADMINISTRATOR DATE

U.S. 20 OVER GRAND RIVER

82

RECORDED INFO ON R/W SHEETS

CENTERLINE SURVEY PLAT

LAKE COUNTY OHIO

ORIGINAL PAINESVILLE TOWNSHIP LOT NOS 6, 8, & 10 IN TRACT 2

I HEREBY CERTIFY THIS PLAT TO BE A TRUE DELINEATION OF A SURVEY MADE BY WOODRUFF INC FOR THE OHIO DEPARTMENT OF TRANSPORTATION

DATE MAY 16, 1985 BY William J. Vondra

REGISTERED PROFESSIONAL SURVEYOR No. 5849

STATE OF OHIO — WILLIAM J. VONDRA 5849 — REGISTERED SURVEYOR

RECEIVED _____
RECORDED _____
PLAT BOOK _____ PAGE _____
SIGNED _____ COUNTY RECORDER
FEE _____
SIGNED _____ PE No _____
DATE _____ DIVISION DEPUTY DIRECTOR
DIV 12

F.A.P.N.H. REGION	STATE	PROJECT	
5	OHIO		

83/86

1/4

LAKE COUNTY
LAK-20-17.14

- EXISTING MONUMENT
- STANDARD MONUMENT ASSEMBLY
- SEE STD DWG MC-1
- TRAVERSE POINT

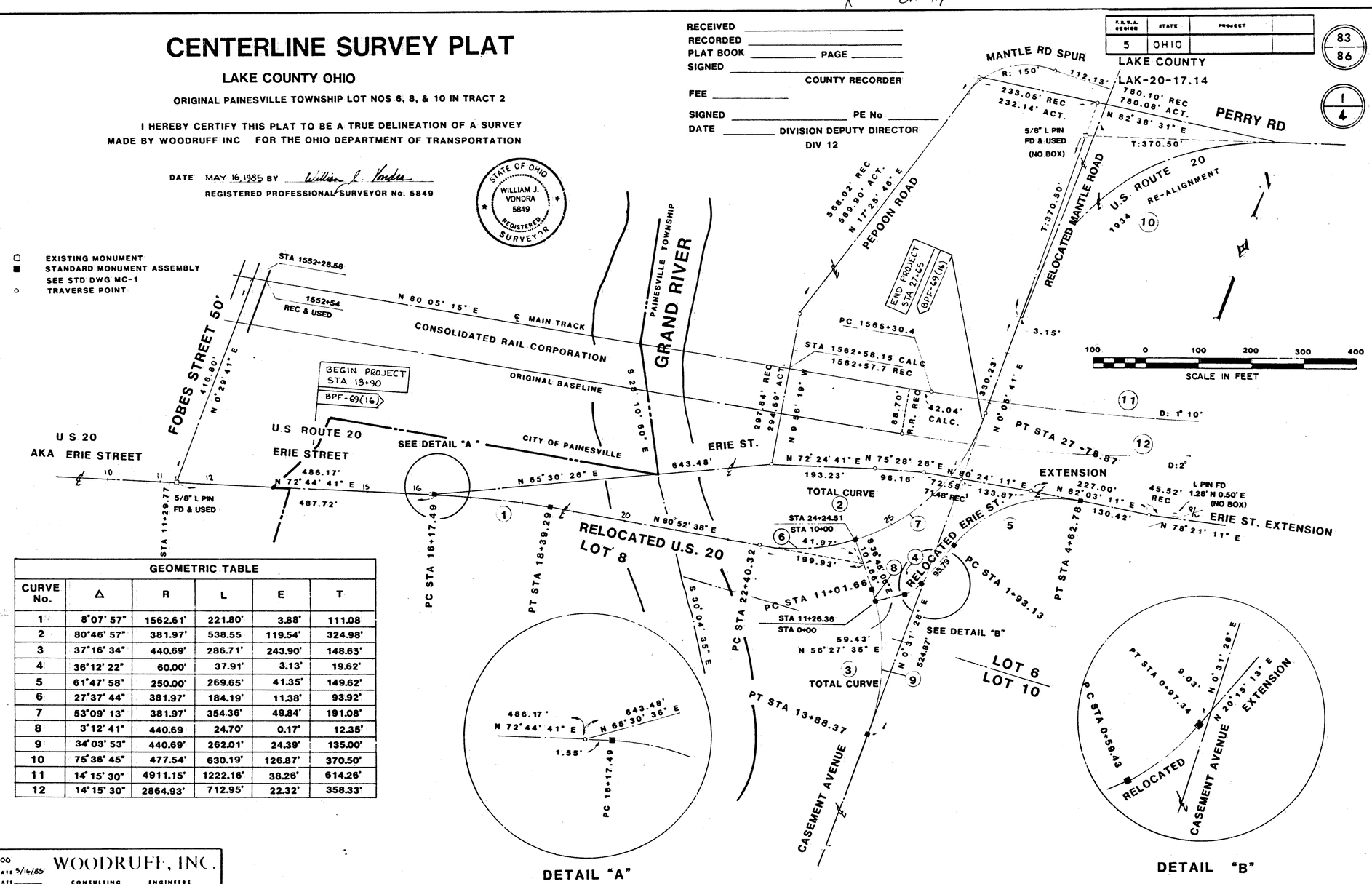

GEOMETRIC TABLE					
CURVE No.	Δ	R	L	E	T
1	8°07' 57"	1562.61'	221.80'	3.88'	111.08
2	80°46' 57"	381.97'	538.55	119.54'	324.98'
3	37°16' 34"	440.69'	286.71'	243.90'	148.63'
4	36°12' 22"	60.00'	37.91'	3.13'	19.62'
5	61°47' 58"	250.00'	269.65'	41.35'	149.62'
6	27°37' 44"	381.97'	184.19'	11.38'	93.92'
7	53°09' 13"	381.97'	354.36'	49.84'	191.08'
8	3°12' 41"	440.69	24.70'	0.17'	12.35'
9	34°03' 53"	440.69'	262.01'	24.39'	135.00'
10	75°36' 45"	477.54'	630.19'	126.87'	370.50'
11	14°15' 30"	4911.15'	1222.16'	38.26'	614.26'
12	14°15' 30"	2864.93'	712.95'	22.32'	358.33'

SCALE 1"=100
MADE WJV DATE 5/16/85
TRCD ____ DATE ____
CKD ____ DATE ____

WOODRUFF, INC.
CONSULTING ENGINEERS
CLEVELAND OHIO

U S 20 OVER GRAND RIVER

PROPERTY MAP

F.H.W.A. REGION	STATE	PROJECT	
5	OHIO		

84
86

2
4

LAKE COUNTY
LAK-20-17.14

PROPERTY OWNERS	
OWNERSHIP No.	OWNERS NAMES
101	OBRON CORP., AN OHIO CORPORATION AKA OHIO BRONZE POWDER CO.
102	CASEMENT GOLF INC., AN OHIO CORP.
103	SIDCO, AN OHIO PARTNERSHIP
104	CONSOLIDATED RAIL CORPORATION
105	SIDCO, AN OHIO PARTNERSHIP

UTILITY OWNERS	
TYPE	NAME & ADDRESS
ELECTRIC	THE CLEVELAND ELECTRIC ILLUMINATING CO 2210 SOUTH RIDGE ROAD WEST ASHTABULA, OHIO 44004
	PAINESVILLE ELECTRIC DEPARTMENT 7 RICHMOND STREET PAINESVILLE, OHIO 44077
GAS	THE EAST OHIO GAS CO. 1010 WEST 30TH STREET ASHTABULA, OHIO 44004
WATER	PAINESVILLE WATER DEPARTMENT 7 RICHMOND STREET PAINESVILLE, OHIO 44077
TELEPHONE	OHIO BELL TELEPHONE CO 34 S. ST. CLAIR AVE 3RD FLOOR PAINESVILLE, OHIO 44077

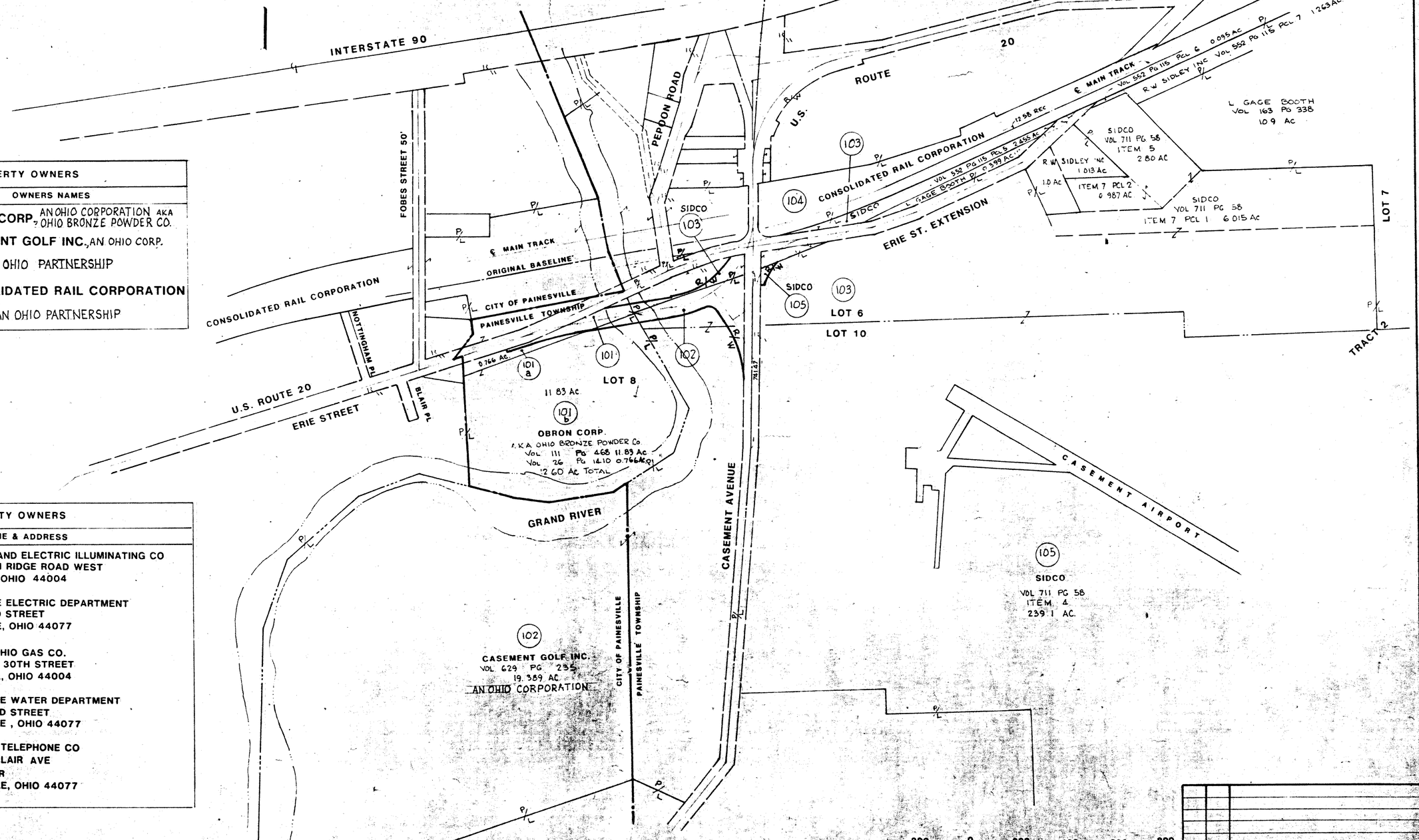

SCALE 1:200
MADE NJV DATE 5-96/AS
CKD ____ DATE ____
RCD ____ DATE ____

WOODRUFF, INC.
CONSULTING ENGINEERS
CLEVELAND OHIO

REV.	DATE	DESCRIPTION
DAS	8-86	REVISED PARCEL 105
HRT	5-2006	REV. OWNER PCLS 101, 102, 103 & 105

PROPERTY MAP

U.S. 20 OVER GRAND RIVER

TOTAL NUMBER OF____
5 OWNERSHIPS
0 TOTAL TAKES
0 OWNERSHIPS WITH STRUCTURES INVOLVED
0 OWNERSHIPS WITH "P" ITEMS

SUMMARY OF ADDITIONAL RIGHT OF WAY

F.A.U.A. REGION	STATE	PROJECT	
5	OHIO		

LAKE COUNTY
LAK-20-17.14

85 / 86 — 3 / 4

PARCEL	OWNERS	SHEET NO.	OWNER RECORD BOOK	OWNER RECORD PAGE	RECORD AREA	TOTAL P.R.O.	GROSS TAKE	P.R.O. IN TAKE	NET TAKE	STRUCTURE	NET RESIDUE LEFT	NET RESIDUE RIGHT	TYPE FUND	REMARKS AND PERSONALTY	AS ACQUIRED BOOK	AS ACQUIRED PAGE
101	OBRON CORP., AN OHIO CORPORATION AKA		26	1410	25.182	0.94803	0.56798	0			25.182			HIGHWAY EASEMENT		
101 SL	OBRON CORP. OHIO BRONZE POWDER CO.		111	468			0.65000	0						SLOPE EASEMENT		
101 T1	OBRON CORP.						0.57351							TEMP. WORK EASEMENT FOR DRIVEWAY RECONSTR.; MOD. OF GAS WELL-BY OWNER- INCL. IN R/W SETTLEMENT		
101 T2	OBRON CORP.						0.04274							TEMPORARY WORK EASEMENT FOR BRIDGE CONSTRUCTION		
101 S	OBRON CORP.						0.12919			P				SEWER EASEMENT FOR 42" STORM SEWER/P-BILLBOARD TO BE REMOVED		
101 SA	" "						-							SPECIAL WAIVER OF DAMAGE TO RELOCATE GAS METER		
102	CASEMENT GOLF INC., AN OHIO CORPORATION		629	235,237	19.389	1.57537	0.96556	0			19.389			HIGHWAY EASEMENT		
102 T	CASEMENT GOLF INC.						0.41121							TEMPORARY WORK EASEMENT FOR BRIDGE CONSTRUCTION & GRADING		
103 a	SIDCO, AN OHIO PARTNERSHIP		713	329	3.62319*	1.32010	0.47520	0						(LISTED AS PARCEL 5 IN DEED (2.455Ac.)) HIGHWAY EASEMENT		
103 b	R.W. SIDLEY INC.						0.22880	0			3.623			(LISTED AS PARCEL 5 IN DEED) HIGHWAY EASEMENT		
103 T1	R.W. SIDLEY INC.						0.38674							TEMPORARY WORK EASEMENT FOR BRIDGE CONSTRUCTION & GRADING		
103 T2	R.W. SIDLEY INC.						0.02701							TEMPORARY WORK EASEMENT FOR GRADING		
103 T3	R.W. SIDLEY INC.						0.02572							TEMPORARY WORK EASEMENT FOR GRADING		
104T1	CONSOLIDATED RAIL CORPORATION				N/A	N/A	0.25119	0			N.A.			TEMPORARY WORK EASEMENT FOR GRADING		
104 T2	CONSOLIDATED RAIL CORPORATION						0.08778							TEMPORARY WORK EASEMENT FOR GRADING		
105	SIDCO, AN OHIO PARTNERSHIP		711	58	239.1	1.23207	0.1179	0			239.1			(LISTED AS ITEM 7 IN DEED) HIGHWAY EASEMENT		

SCALE ____
MADE W.J.V. DATE 9-19-85
TRCD. ____ DATE ____
CKD. ____ DATE ____

WOODRUFF, INC.
CONSULTING ENGINEERS
CLEVELAND OHIO

P — PERSONALTY

* CALCULATED

REV.	DATE	DESCRIPTION
W.F.T.	11-10-88	ADDED PCL 101 SA & REMARKS
DAS	8-13-86	REVISED 105; DELETED 105 T
HRT	5-20-86	REV. OWNER PCLS 101, 102, 103 & 105
DAS	5-9-86	ADDED BILLBOARD REMOVAL PARCEL 101-S

SUMMARY OF ADDITIONAL RIGHT-OF-WAY

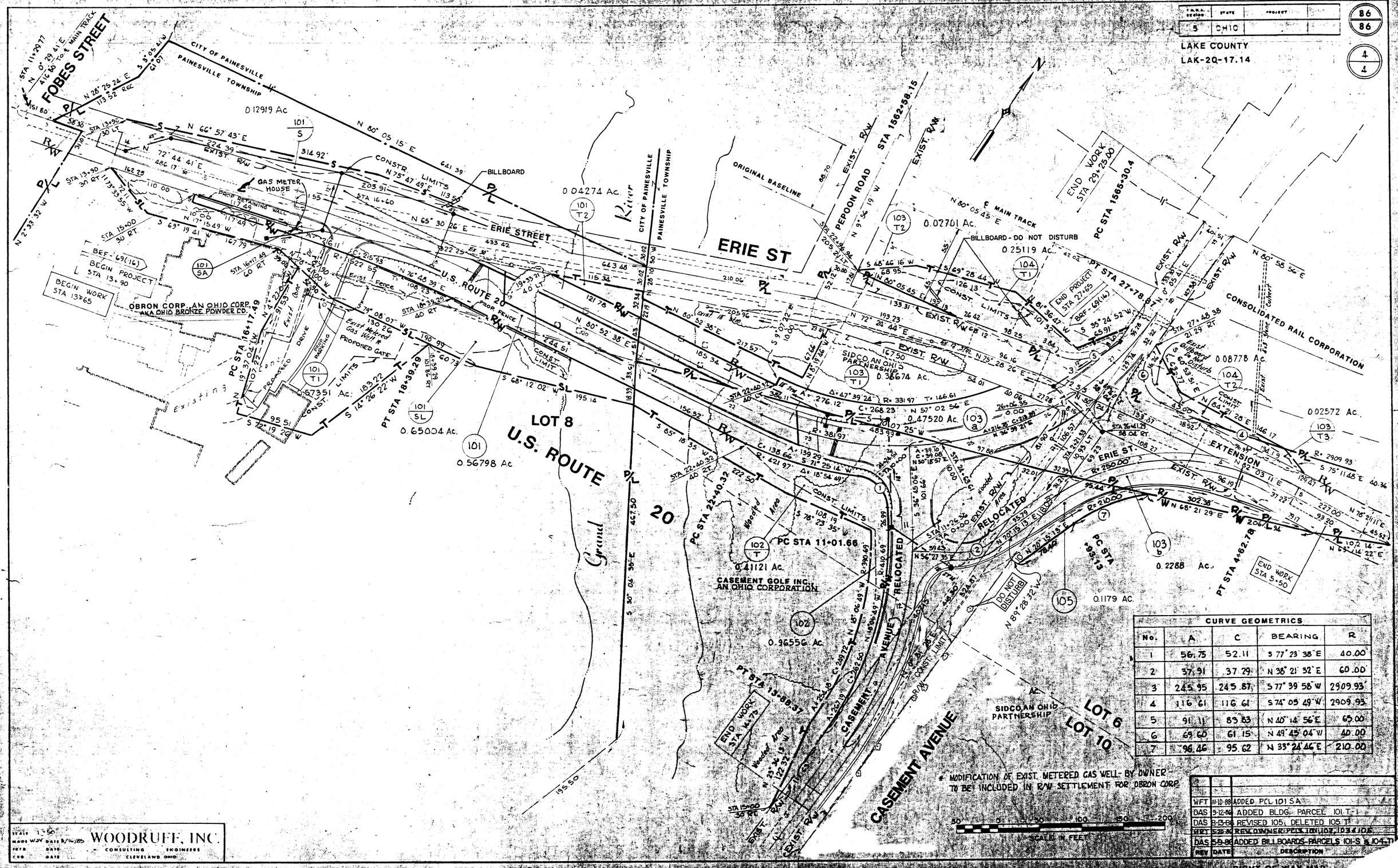

CURVE GEOMETRICS				
No.	A	C	BEARING	R
1	56.75	52.11	S 77° 23' 38" E	40.00
2	37.91	37.29	N 38° 21' 32" E	60.00
3	245.95	245.87	S 77° 39' 58" W	2909.93
4	116.61	116.61	S 74° 05' 49" W	2909.93
5	91.11	83.83	N 40° 14' 56" E	65.00
6	69.60	61.15	N 49° 45' 04" W	40.00
7	96.46	95.62	N 33° 24' 46" E	210.00

REV	DATE	DESCRIPTION
WFT	11-10-88	ADDED PCL 101 SA
DAS	9-12-86	ADDED BLDG. PARCEL 101 T-1
DAS	8-13-86	REVISED 105, DELETED 105 T1
HRT	5-20-86	REV. OWNER: PCLS 101, 102, 103 & 105
DAS	5-9-86	ADDED BILLBOARDS-PARCELS 101-S & 104-T1

RIGHT OF WAY MAP

WOODRUFF, INC.
CONSULTING ENGINEERS
CLEVELAND OHIO

F.A.P.A. REGION	STATE	PROJECT
5	OHIO	

LAKE COUNTY
LAK-2Q-17.14

86/86

4/4